ATLANTIC Environmental LLC
135 River Road • Woolwich, ME 04579
207-615 - 1527 • lisa@atlanticenviromaine.com
www.atlanticenviromaine.com

March 10, 2020

Mr. Bill Butler
Town of China
571 Lakeview Drive
China, ME 04358

Re: Conditional Use Permit Application on behalf of Sunraise Development, LLC, Route 3, China, Maine (Tax Map #33, Lot #16).

Dear Mr. Butler

On behalf of SunRaise Development, LLC Atlantic Environmental, LLC (AE) is pleased to submit an application to the Planning Board for the construction of a 3.0 mega-watt AC solar energy generation project located off Route 3. The project consists of the placement of 10,100 solar panels within an approximate twenty-three (23) acre parcel. The Applicant requests the Planning Board consider this application at their March 24, 2020 meeting.

Thank you in advance for your consideration of this Application. If you require any additional information or clarifications, please feel free to contact me at 207 – 615 - 1527 or by email at lisa@atlanticenviromaine.com.

Sincerely,
Atlantic Environmental LLC.

Lisa Vickers,
Senior Project Manager

REQUEST TO MEET WITH THE CHINA PLANNING BOARD

NAME: SunRaise Development, LLC PHONE: (781) 698 - 6093

ADDRESS: 26 Market Square

CITY/TOWN: Portsmouth, NH ZIP: 03801

****

I, SunRaise Development, LLC, am requesting to be placed on a forthcoming meeting agenda with the China Planning Board to review my intentions for the following:

The construction of a 3.0 mega-watt AC solar energy generation project located off Route 3 that inludes an access road, battery storage, string inverters, transformers, and interconnecting switchgear.

Please notify me of the time that I may be scheduled for review with the local Planning Board.

Thank you,

Signature of Applicant

3/10/2020
Date

REVISED 5/2005

Town Of China
Application for a Permit from the Planning Board

Applicant SunRaise Development LLC c/o Kevin Corbett Phone (Home) _____

Mailing Address 26 Market Square (Work) _____

Portsmouth, NH 03801 (Cell) (781) 698 - 6093

Property Owner Ouellette Sand & Gravel c/o Daniel Ouellette Phone (Home) _____

Mailing Address P.O. Box 303 (Work) _____

South China, ME 04358 (Cell) (207) 242 - 6228

Property Address Route 3 Map 33 Lot 16

Book 13211 Page 262 - 266

X If applicant is not the property owner, provide a copy of a lease agreement, purchase and sale agreement subject to Planning Board approval or other document demonstrating that you have title to the property.

Acreage of Lot 23.06 acres

Existing use of property Commercial/Undeveloped

Property is zoned as: _____ Resource Protection _____ Stream Protection _____ Shoreland X Rural

Proposed Use(s) – Check all that apply

_____ Subdivision
_____ Multi Family Residence
_____ New Commercial Structure or Addition
_____ Change of Use
_____ Dock (_____ Temporary, _____ Permanent)
_____ Timber Harvest – Check all that apply
_____ Resource Protection, _____ Shoreland, _____ Stream Protection Exceeds 40%
_____ Filling or other earth moving **less than** 100 cubic yards
_____ Filling or other earth moving **greater than** 100 cubic yards
X Other Solar Array for solar energy generation

1. Site Plan – Provide a site plan with the following information. A GIS based map will often be a good starting point to provide the information in a scaled format. A hand drawn map may also be acceptable.

X Plot of lot and abutting properties drawn to scale
X North arrow and scale of map
N/A Location of existing and proposed septic system and well
X Location of footprint of existing and proposed building(s) and/or addition(s)
X Location of water bodies, wetlands, and other natural features such as wooded areas
X Designation of areas that will be cleared
X Location of public roads that will provide access to the site
X Location of parking areas, pedestrian access ways, and points of ingress and egress from public streets to the lot
X Location of existing and proposed vegetative and non-vegetative buffers and proposed

Revised 2018

landscape plantings
X Location of phosphorus buffer or other phosphorus treatment system, if applicable
N/A Location of existing and proposed outdoor lighting and signs
N/A Location of shoreland and flood zones, if applicable

2. Provide a narrative explaining the project including proposed use(s). Include hours and days that the proposed business will be open.

The Applicant proposes to construct a 3.0 mega-watt AC solar energy generation project on an approximate 23 acre parcel of land. The development includes the construction of approximately 10,100 solar panels that will be racked on TerraSmart racking and includes the construction of a fourteen (14) foot wide access road, battery storage, string inverters, transformers, and interconnecting switchgear. The project is an unmanned operation that will operate during daylight hours.

3. Provide a copy of the existing septic system HHE-200 form, if available. This can be obtained from the CEO / LPI.

Design flow of septic system N/A

4. Provide a copy of the proposed septic system evaluation by a licensed site evaluator if this is deemed necessary by the Town's LPI.

Proposed design flow of septic system N/A

Signoff of LPI The existing septic system is / is not adequate and does / does not need review by a licensed site evaluator. _____
LPI Town of China

5. Indicate which permits are required in addition to the Planning Board Conditional Use Permit. The CEO can provided assistance with this.

_____ Town subdivision
_____ Town Floodplain Management
X Town Building
_____ Town Septic
_____ Town internal plumbing
_____ Town CEO
_____ DEP NRPA

Revised 2018

X DEP Stormwater Permit-by-Rule
_____ DEP Site Location of Development
_____ DOT Driveway Entrance
_____ DOT Traffic Movement Permit
_____ Fire Marshall's Office
_____ Dept of Human Services
_____ U S Army Corp of Engineers
_____ Other _____

6. a. Provide a copy of the State DOT driveway entrance permit if a new driveway is proposed on a state road or if the DOT determines that a driveway entrance permit is necessary for a change of use.

   b. Provide a copy of the DOT traffic movement permit if it is required.

7. Provide an evaluation of the phosphorus control methodology to be used on the lot if the phosphorus control ordinance is applicable for the proposal. The CEO will verify whether or not this is applicable to your proposal.
   Signoff of CEO - The proposed use does / does not require phosphorus controls to be implemented.

   _____
   CEO Town of China

8. Provide a sketch of the proposed building(s) or addition(s) including height, width, footprint, and floor plan.

9. Verify that lot coverage, lot area, property line and water setbacks requirements, and structure height requirements will be met if additions or new structures are proposed (see section 5(A) and 5(B) of Land Use Ordinance for specific requirements).

Dimensional Requirements		Required	Actual/Proposed
Lot Coverage		20%	<1% (without panels) +/- 19.4% (with panels)
Lot Area		40,000 sq. ft.	23.06 acres
Property Line Setbacks	Road	25 ft	min. 80 ft.
	Side	10 ft	min. 20 ft.
	Rear	15 ft	min. 80 ft.
Water or Wetland Setback		N/A	N/A
Water Frontage		N/A	N/A
Structure Height		Not greater than 35 ft	N/A

The information provided is accurate to the best of my knowledge.

Signed on behalf of SunRaise Development, LLC
Signature of applicant

Date 3/10/2020

Revised 2018

ATLANTIC Environmental LLC
135 River Road • Woolwich, ME 04579
207-837-2199 •tim@atlanticenviromaine.com
www.atlanticenviromaine.com

January 2, 2020

To whom it may concern:

By this letter, I authorize Atlantic Environmental LLC to act on my behalf as my Agent for the preparation and submission of all federal, state, and local town or city permit applications and relevant documents and correspondence related to the construction of a solar array project located on Route 3 (Map 33, Lot #16) in China, Maine. This authorization includes attending meetings and site visits, appearing before all boards, commissions, and/or committees, and providing other services as required for completing the aforementioned tasks.

Thank you for the opportunity to work with you on this project. Should you have any additional questions, please do not hesitate to contact me at 207-837-2199 or via email at tim@atlanticenviromaine.com.

Patrick Jackson
Print Name

Signature

1/2/2020
Date

Sincerely,
Atlantic Environmental LLC.

Timothy A. Forrester, Owner

TABLE OF CONTENTS

CONDITIONAL USE PERMIT APPLICATION	
SECTION 1	DEVELOPMENT DESCRIPTION
SECTION 2	TITLE, RIGHT, OR INTEREST
SECTION 3	CONDITIONAL USE APPROVAL CRITERIA
SECTION 4	LOT COVERAGE CALCULATIONS
SECTION 5	EMERGENCY RESPONSE PLAN
SECTION 6	NOISE REPORT, GLARE ANALYSIS
SECTION 7	STORMWATER MANAGEMENT REPORT
SECTION 8	SOIL REPORT
SECTION 9	MSDS AND TECHNICAL SPECIFICATIONS SHEETS
SECTION 10	FIRE SUPPRESSION SYSTEM

SECTION 1.0: DEVELOPMENT DESCRIPTION

Objective and Details

As part of LD 1711: An Act to Promote Solar Energy Projects and Distributed Generation Resources in Maine, there is a statewide initiative to develop long term contracts for community solar projects with the Public Utilities Commission (PUC). This project is in response to this legislation.

SunRaise Development LLC (SunRaise) proposes the development and operation of a 3.0 megawatt AC solar energy generation project located off Route 3 the Town of China, Maine. SunRaise has a lease option for an approximately nineteen (19) acre parcel of land that consists of a field area that has most recently been utilized for loam. There are bordering forested uplands and forested wetlands. The development includes the construction of approximately 10,100 solar panels that will be racked on TerraSmart racking and includes the construction of a fourteen (14) foot wide access road, battery storage, string inverters, transformers, and interconnecting switchgear. The project footprint will encompass approximately 12.57 acres and will result in an 0.25 acres (11,067 square feet) of impervious as a result of the access road, equipment pad areas, and support posts. SunRaise intends to line up the appropriate amount and type of offtakers to subscribed to the project closer to a determined construction schedule. SunRaise has experience with subscribing projects for community solar.

Existing Facilities

SunRaise selected the proposed site given the potential to generate solar energy with minimal overall disturbance to the site. The site is located in close proximity to a point of interconnection and an existing substation.

The lease area is currently an undeveloped area that will be accessed off Route 3 in the and the solar panels will be situated primarily within the existing cleared area. A portion of the project boundary that consists of forested area will need to be cleared to limit shading impacts from the trees.

The project was designed to minimize environmental impacts through careful site selection, siting of the solar panels, utilization of the access road, and maintaining forested areas along the project boundary.

Topographic Map

The project site is located in the Town of China, Maine within the 7.5-minute series United States Geological Survey China Lake Quadrangle. A topographic map outlining the project boundary is included in Section 1.0.

Construction Plan

SunRaise has developed a general construction sequence plan and includes the anticipated plan for the major aspects of development:

- Installation of a stabilized construction entrance that will be maintained until the completion of construction and site stabilization.
- Prior to any site clearing, the contractor will place all erosion and sedimentation control systems in accordance with the drawings, or as may be directed by site conditions, in order to maintain the intent of the specifications and permits. Deficiencies or changes on the drawings shall be corrected or implemented as site conditions change. Changes during construction shall be noted and posted on the drawings.
- Timber will be cut and removed from the site. Following timber removal, grubbing and stumping will begin outside of wetland areas. Grubbings may be used in erosion control mix berms. Tree and vegetation clearing and any rough grading shall only occur if the disturbed soil surface can be stabilized within 48 hours of clearing. Tree and vegetation clearing shall be scheduled in conjunction with weather forecast such that no more than ¼" of rain is to be expected within 48 hours of any clearing or grading activity.

- After the site has been cleared of trees, site preparation will begin. The contractor shall maintain temporary erosion and sedimentation control systems as dictated by site conditions, indicated in the construction documents, or as directed by governing authorities or owner to control sediment until final stabilization.
- Access roads will be constructed.
- Underground Electrical, Racking Foundations, Racking Installations, and Module will be installed.
- Property fencing will be installed.
- String Inverter and Equipment Pads will be installed.
- Setting and Wiring of all equipment.
- Grade and gravel access roads.
- Any area disturbed within the limits of the solar array footprint are to be seeded with the specified regionally appropriate native conservation seed mix unless specified otherwise in the plan set.
- The contractor shall stabilize all disturbed area within 48 hours after final grading. In the event that it is not practical to seed areas, slopes must be stabilized with geotextile fabric or other means to reduce the erosive potential of the area.
- Inventory and planting of Buffer Yards as outlined in Landscape Plan.

Drawings

Drawings depicting the development facilities, site work, existing facilities, and topography are included in the application materials.

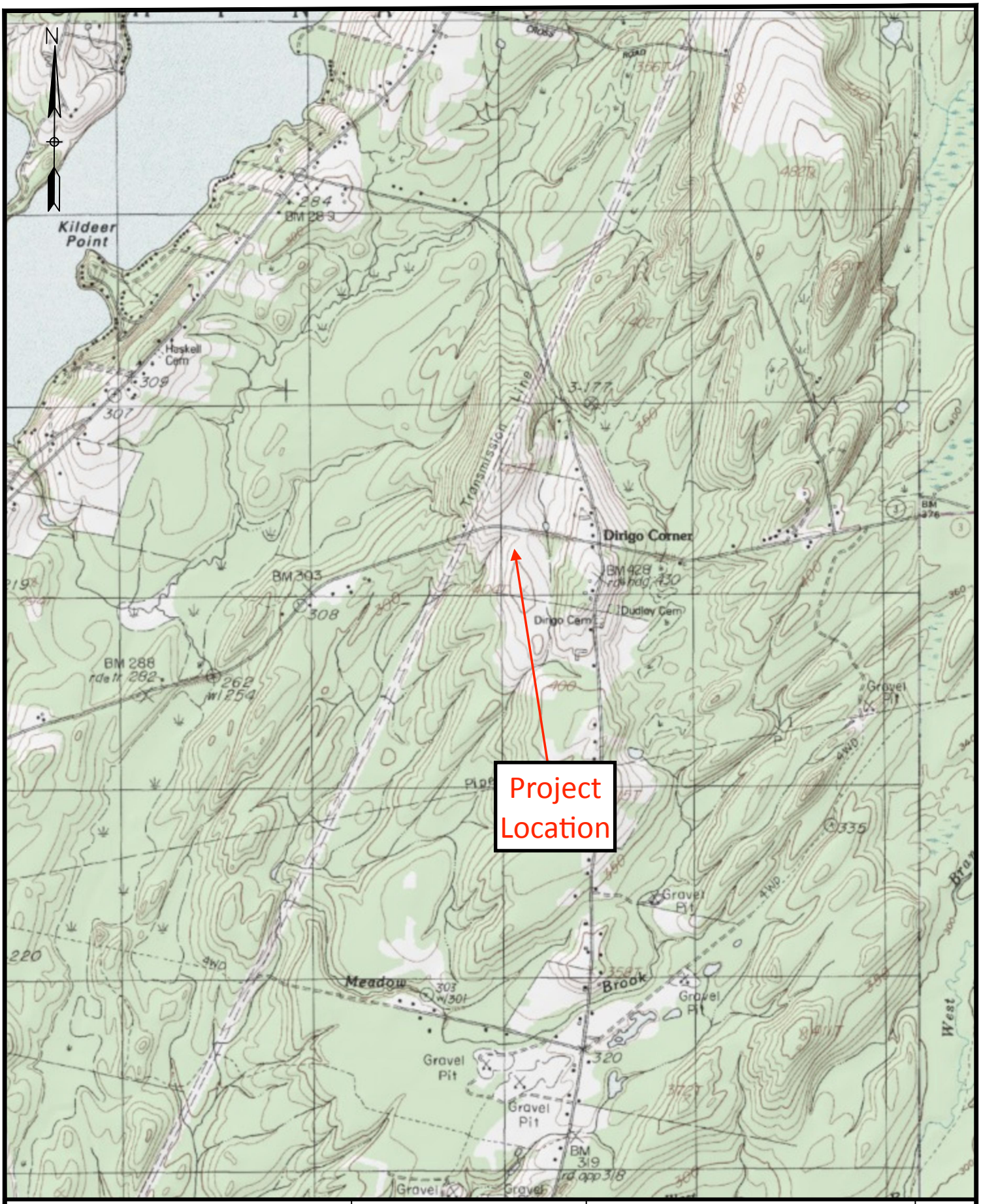

ATLANTIC ENVIRONMENTAL LLC. **Environmental Consultants** **135 River Road, Woolwich, ME 04579** **(207) 837-2199** **tim@atlanticenviromaine.com**	**Date:** 1/22/2020 **Revised:** **Project:** Sunraise - Route 3, China **Drafted By:** --	**PROJECT LOCATION** **Route 3 - SunRaise Development, LLC** **Maine Atlas & Gazetteer** **Map 13 (Section B-3)** **44.409911, - 69.52575**	**Sheet 1 of 1**

SunRaise

OPTION TO LEASE

This Option to Lease (the "**Agreement**" or "**Option Agreement**") is entered into by and between SunRaise Development, LLC, of P.O. Box 1340, Portsmouth, New Hampshire 03802, hereinafter referred to as "**Lessee**" and Ouellette Sand & Gravel, Inc., with a mailing address of PO Box 303, South China, ME 04358, hereinafter referred to as "**Owner**".

W I T N E S S E T H:

WHEREAS, the Owner is the owner of certain real estate located at 0 Route 3, China, ME 04358, Maine at and further described in Exhibit A attached hereto (the "Property")

WHEREAS, the Parties have agreed that Lessee may lease a portion of the Property from the Owner for the purpose of constructing and operating a solar photovoltaic electric generation and battery storage system(s) the "**Project**"; and

WHEREAS, the Parties wish to reduce their agreement to writing.

NOW THEREFORE, in consideration of a non-refundable [redacted] and other good and valuable consideration and the mutual benefits accruing to each, the Parties hereby covenant and agree as follows:

1. **Option.** The Owner hereby grants to Lessee the option to lease (the "**Option**") the Property for the purpose of developing the intended floating solar electricity generation and battery storage Projects, subject to all local, state and federal rules and regulations. Lessee shall exercise its Option by written notice to Owner, which notice shall be effective when given by either registered or certified United States mail, return receipt requested, postage prepaid to the mailing address of: PO Box 303, South China, ME 04358, or such other address as Owner may provide by written notice.

2. **Premises.** The area to be leased shall be limited to the area that will be improved with the solar photovoltaic electricity generation infrastructure, interconnection and equipment (the "**Leased Premises**"). The Lessee is responsible for entitlements, improvements, assessments and maintenance of the Premises during the period relative to the Projects at its sole cost and expense. The entitlements include all local, state, federal, or utility approvals, permits and agreements necessary to build the solar photovoltaic facility and connect it to the grid. The Projects shall be permitted under the Maine Public Utilities Commission ("PUC") rules and regulations, which would then incorporate a specific design criteria and any other necessary compliance from the Owner as determined by the PUC or other state or municipal agencies.

3. **Site Lease Agreement.** Should the Lessee exercise the Option to Lease any of the Property, Owner and Lessee agree to negotiate and execute a commercially standard site lease agreement concerning such Property (the "**Site Lease Agreement**") in good

SunRaise

faith. Lessee will attempt to provide Owner a draft Site Lease Agreement within 60 days of such exercise, to be negotiated by the Parties within 60 days of Owner's receipt of such Site Lease Agreement, provided that the same is mutually satisfactory to Owner and Lessee prior to execution. Such 60-day period shall be automatically extended if the Parties continue to negotiate such Site Lease Agreement in good faith in accordance with the Option Period in Section 5 below.

4. **Rent.** If Lessee elects to lease the Leased Premises from Owner pursuant to the Site Lease Agreement, then the Lessee shall pay rent to Owner in the annual amount of [redacted] per acre (the "**Rent**"), which represents the total rent paid from Lessee to Owner per year, commencing on the commencement date of the Site Lease Agreement (the "**Commencement Date**") of any Project, to be paid in monthly installments. The Commencement Date is the date upon which Lessee issues a full notice to proceed under any engineering, procurement, or construction contract related to the Projects, or such earlier date as the parties may agree in the Site Lease Agreement. The Term of any Site Lease Agreement shall be twenty (20) years from the Commercial Operation Date for any Project. The Commercial Operation Date for a Project is the date on which Tenant obtains all necessary permits or authorizations from the utility providers to fully operate any Project and to sell electricity.

   The Lessee shall have the right to extend the Site Lease Agreement with three additional five-year extension options. The Rent for the duration of each of the extension periods shall be 2.5% greater than the prior year. The capacity of the Projects is subject to broad change based on the local permitting bylaw and rulings, wetlands, design configuration, the capacity of the electrical grid, and all other state and local permits and approvals.

5. **Option Period.** This Agreement shall be and remain in full force and effect for twelve (12) months (the "**Option Period**") following execution. Neither the Owner nor any of its affiliates shall enter into any agreements with any other parties, make, accept or solicit any offers to or from any other parties, or otherwise discuss any terms relating to the lease of the Property with any other parties during the term of the Option Period. Lessee shall have the right to extend the Option Period for two (2) additional twelve (12) month terms, with Lessee paying Owner [redacted]Dollars for each additional twelve (12) month term so long as Lessee provides evidence of Lessee's diligent efforts to move the Projects forward with all applicable utilities, state, and local permitting authorities.

6. **Removal of Solar Facility.** For any of the portions of the Property that are ultimately subject to a Site Lease Agreement, such agreements shall contain provisions for the removal of the portions on the Projects located on the Leased Premises at the sole cost of the Lessee. The provisions of such paragraph in a Site Lease Agreement shall survive the termination of any such Site Lease Agreement.

7. **Insurance.** Lessee (or its contractor) shall, at its own cost and expense, during the term of this Option Period, maintain, with a company or companies licensed or

qualified to do business in the State of Maine commercial general liability insurance with limits not less than $2,000,000 for injury to or death of one or more persons in any one occurrence and $2,000,000 for damage or destruction to Property in any one occurrence. Owner shall be an additional insured under the Lessee's or other Party's policy. Lessee's insurance obligations may be covered by an umbrella insurance policy and shall only over liability caused by the Projects or its operation. Owner shall maintain all current insurance coverage for portions of the Premises subject to a Site Lease Agreement.

8. **Indemnification**. Each Party shall indemnify and save the other Party harmless from any and all costs, damages, claims or other liabilities or injuries to persons, including reasonable attorney fees, that may arise from any and all actions or omission of the indemnifying Party, its employees, invitees, servants or agents. Lessee and its assigns shall also indemnify and save the Lessor harmless from and against any and all claims, damages and liabilities arising from Lessee's actions. Lessor shall indemnify Lessee for any conditions on the Property that existed prior to Lessee entering onto the Property. The provisions of aforesaid indemnification shall survive the termination of the Site Lease Agreement.

9. **Taxes**. As of the Commencement Date of the Site Lease Agreement, Lessee agrees to pay or cause to be paid when due all real estate taxes, municipal charges and assessments due against the Leased Premises which are clearly associated with Lessee's improvements of the Leased Premises. Owner shall cooperate with Lessee in the protest of any tax assessment by providing Lessee with information regarding the relative valuation of the Property, as applicable, and allowing Lessee to participate in any proceeding related to such tax protest. The intent is for the current Maine Open Space/Farm Land/Tree Growth tax treatment to remain in existence for the Leased Premises and for such taxes due by Lessee to reflect the proportionate Open Space/Farmland/Tree Growth taxes. Nothing in this section shall be construed as limiting Lessee's right to contest, appeal or challenge any tax assessment. Lessee will be responsible for the penalties associated with removing the Leased Premises from Open Space/Farm Land/Tree Growth use proportional to the area of the Leased Premises relative to the Property.

10. **Governing Law**. This Agreement will be interpreted in accordance with the laws of the State of Maine.

11. **Lessee Access; Testing**. Owner acknowledges that during the Option Period Lessee will be conducting due diligence and development activities in order to determine the eligibility of the Property for construction and operation of Projects. Accordingly, Owner agrees that Lessee's officers, agents, contractors and consultants shall have the right, during the Option Period, to access the Property during reasonable business hours in order to conduct such surveys, examinations, inspections or other activities as Lessee may deem necessary; provided, however, that Lessee shall not materially alter the Property without Owner's prior consent.

SunRaise

12. **Termination**. Lessee may terminate this Option Agreement at any time upon delivery of written notice to Owner, which notice will be effective upon receipt.

13. **Cooperation**. The Parties shall execute any and all other documents and take all actions necessary to effectuate the intent of this Agreement. Owner acknowledges that Lessee will have documentation that requires Owner's cooperation on a timely basis during the Option Period.

14. **Binding Agreement**. This Agreement shall be binding upon the Parties hereto and the respective heirs, successors and assigns of each. For the avoidance of doubt this Agreement shall supersede all prior Agreements and negotiations. Should any provision of this Option Agreement be or become invalid, void, illegal or not enforceable, it shall be considered separate and severable from the Option Agreement and the remaining provisions shall remain in force and be binding upon the parties hereto as though such provision had not been included.

15. **Entire Agreement.** The parties represent that there are no oral agreements affecting this Option Agreement and that this Option Agreement, including exhibits and riders, if any, attached hereto and forming a part hereof, supersede and cancel any and all previous negotiations, arrangements, letters of intent, lease proposals, agreements, representations, promises, warranties and understandings between the parties

16. **Assignment**. Upon notice to Owner, Lessee shall have the right to assign or transfer its rights under this Agreement, in whole or in part, to any person or any business entity at any time without Owner's consent, subject to the assignee assuming all of Lessee's obligations hereunder.

No further text. Signature page follows.

SunRaise

IN WITNESS WHEREOF, the Lessee and Owner have executed this Option Agreement, as of the 20 th of September, 2019.

LESSEE :

SunRaise Development, LLC
An affiliate of SunRaise Investments, LLC

By: _____
Name: Patrick Jackson
Title: Managing Member

OWNER:

Ouellette Sand and Gravel, Inc.

By: _____
Name: Daniel Ouellette
Title: President

SunRaise

EXHIBIT A
LEASED PREMISES
Route 3 PROPERTY

Leased Premises – Route 3 Property will consist of a portion of Property at 0 Route 3, China ME, Map 33, Parcel 016, as conveyed to Owner via that certain deed dated May 16, 2019, recorded in Book 13211, Page 262 in the Kennebec Country Registry of Deeds, ME.

The intent of the Leased Premises – Route 3 Property is to install between 4-6 MW DC on 19 acres, but the final system size, exact location, and design will depend on local permitting bylaws and authorizations, DEP guidance and authorization, MOER guidance and authorization, technological feasibility, and utility approvals.

The Description of Leased Premises –Route 3 Property will be replaced with actual premises metes and bounds upon completion of system design and site survey and incorporated in the Site Lease Agreement that is forthcoming.

This image is for illustrative purposes only.

OPR BK 13211 PGS 262 - 266 05/17/2019 01:06:47 PM
INSTR # 2019009089 # OF PAGES 5
ATTEST: BEVERLY BUSTIN-HATHEWAY
REGISTER OF DEEDS KENNEBEC COUNTY, ME

TRANSFER TAX PAID

Warranty Deed
(Maine Statutory Short Form)

KNOWN ALL MEN BY THESE PRESENTS, that we, **William R. Peebles III**, of the Town of China, Kennebec County, Maine, and **Diannah R. Peebles** of the Town of Palermo, Waldo County, Maine (Grantors), for consideration paid, GRANT to

Ouellette Sand & Gravel, Inc., a Maine corporation (Grantee),

whose mailing address is PO Box 303, China, ME 04358

with WARRANTY COVENANTS, the land in China, County of Kennebec, State of Maine, described as follows:

SEE SCHEDULE "A" Attached Hereto and Incorporated Herein.

WITNESS my hand and seal this 16th day of May, 2019.

Signed, Sealed and Delivered in the presence of

Witness

William R. Peebles III

State of Maine
County of Kennebec, ss:

Dated: May 16, 2019

Then personally appeared the above-named William R. Peebles III and acknowledged the forgoing instrument to be his free act and deed. Before me,

~~Attorney at Law~~/Notary Public

My Commission Expires:_____

Print Name BONNIE J. CASPERSEN
NOTARY PUBLIC, MAINE
MY COMMISSION EXPIRES
MAY 27, 2021

(5) D. McCullum

WITNESS my hand and seal this 14th day of May, 2019.

Signed, Sealed and Delivered in the presence of

Witness

Diannah R. Peebles

State of Maine
County of Kennebec , ss:

Dated: May 14, 2019

Then personally appeared the above-named Diannah R. Peebles and acknowledged the forgoing instrument to be her free act and deed. Before me,

~~Attorney at Law~~/Notary Public

My Commission Expires:_____

Print Name: BONNIE J. CASPERSEN
NOTARY PUBLIC, MAINE
MY COMMISSION EXPIRES
MAY 27, 2021

SCHEDULE A

Certain lots or parcels of land with any Buildings and improvements thereon, Situate in China, County of Kennebec and State of Maine, more particularly bounded and described, to wit:

PARCEL ONE: Beginning at an iron stake on the South side of Route #3 in said China marking the northwest corner of land conveyed to Donald M. Spencer, dated August 3, 1972, recorded in Book 1595, Page 130;

Thence Southerly along said Spencer's west line to north line of land conveyed by one St. John to Ricard J. Pellerin and Hazel M. Pellerin;

Thence Westerly along the stone wall on said Pellerins' north line to a corner formed by another stone wall;

Thence Northerly along last mentioned stone wall to said highway;

Thence Easterly along said highway a distance of six hundred forty-five (645) feet, more or less, to the point of beginning.

PARCEL TWO:

Also another certain lot or parcel of land located in the Town of China in Kennebec County southerly from and not abutting Route #3 and westerly from and not abutting the Dirigo Road, bounded and described as follows:

Beginning on the aforesaid road leading from Dirigo Corner to Weeks Mills Village, where said road intersects the northerly bound of land now or formerly of Raymond Reed (formerly of Samuel Reed and theretofore of David Dudley); thence westerly by said northerly bound of Raymond Reed to a corner, viz., the corner of said land of Reed with land now or formerly of C.N. Webber and with land now or formerly of Carsten Patterson and with the premises by these presents conveyed; thence northerly by the land of Patterson aforesaid to the southerly bound of land now or formerly of David Cates (more recently of Samuel Cates); thence easterly by said southerly bound of land formerly of Cates, to the highway leading from Augusta to Belfast; thence, by said highway, in an easterly direction, to the intersection with said highway of the westerly bound of land now or formerly of Bertha Buzzell; thence southerly by said westerly bound of land of Buzzell to the southwesterly corner of said land of Buzzell; thence by the southerly bound of said land of Buzzell easterly to land now or formerly of Kenneth Dinsmore; thence southerly by the westerly bound of land of Dinsmore to the northerly bound of land of Raymond Reed (formerly of Samuel Reed and theretofore of David Dudley) hereinbefore mentioned; thence westerly by said northerly bound of Reed to the point of beginning.

Excepting and reserving unto their owners the parcels previously conveyed out of the above described lot:

Deed of Hazel Pellerin to Edward C. Oliver dated October 29, 1982, and recorded at Book 2522, Page 38 at the Kennebec County Registry of Deeds;

Deed of Hazel Pellerin to Diana R. Pellerin dated December 9, 1985, and recorded at Book 2892, Page 141 at the Kennebec County Registry of Deeds;

Deed of Hazel Pellerin to Edward R. Comber, Jr., dated June 27, 1986, and recorded at Book 2986, Page 69 at the Kennebec County Registry of Deeds;

Deed of Hazel Pellerin to Mark J. Pellerin dated September 15, 1989, and recorded at Book 3616, Page 226 at the Kennebec County Registry of Deeds;

Deed of Hazel Pellerin to Mark J. Pellerin dated August 1, 1985, and recorded at Book 2833, Page 271 at the Kennebec County Registry of Deeds;

Deed of Dean Rhoades and Lorraine Rhoades to Hazel L. Pellerin a/k/a Hazel Pellerin dated July 15, 1996, and recorded at Book 5174, Page 290 at the Kennebec County Registry of Deeds;

Deed of William Peebles and Diannah Peebles at Book 11175, Page 303 at the Kennebec County Registry of Deeds;

Deed of William Peebles and Diannah Peebles at Book 11256, Page 26 at the Kennebec County Registry of Deeds;

Also excepting and reserving unto the grantor (Hazel L. Pellerin herself) the following described parcel of land located on the southerly side of Route #3 or the Belfast Road, so-called:

Beginning at the northwest corner of the land of Diana R. Pellerin (Book 2892, Page 141) and the southerly right-of-way of Route #3; thence in an easterly direction along Route 3 to the northwesterly corner of Parcel One above described (also being described in a deed from Earl L. McLaughlin to Hazel M. Pellerin et al., at Book 1597, Page 218) at a rock wall;

Thence in a southerly direction along said rock wall to a point where it intersects with an east-west rock wall and which is the southeast corner of the property described at Book 1597, Page 218;

Thence in an easterly direction on a line extending from said east-west rock wall to the easterly line, or an extension thereof, of land of Diana R. Pellerin;

Thence northerly along said Diana R. Pellerin's easterly line, or extension thereof, to Route #3 and the point of beginning.

Excepting and reserving herefrom, that portion of the area within the bounds herein described, which was by Josephine Dudley (or otherwise known as Lucy Dudley) conveyed to Central Maine Power Company by Warranty Deed dated March 29, 1940, and recorded in the Kennebec County Registry of Deeds in Book 762, Page 459.

Also subject to and excepting herefrom, the conveyance made by George W. St. John et al., to Central Maine Power Company by Warranty Deed dated August 20, 1955, and recorded in said Registry in Book 1021, Page 173.

Any and all other rights, easements, privileges and appurtenances belonging to the granted estate are hereby conveyed.

Meaning and intending to describe all of the remaining land as described in a Deed of Dean E. Rhoades and Lorraine K. Rhoades to William Peebles and Diannah Peebles dated October 29, 2004, and recorded at Book 8182, Page 100 at the Kennebec County Registry of Deeds.

Town of China
Conditional Use Permit Application

Conditional Use Permits: The **Planning Board shall approve a Conditional Use Application if all of the following criteria are met inclusive of conditions:**

1. **The proposed use will meet the definition or specific requirements set forth in this Ordinance or will be in compliance with applicable State or Federal laws.**

   Findings and statement of reasons: The proposed use is permitted in accordance with *the China Land Development Code, Chapter 2, Land Use Ordinance, Section 4, USES, Item#* _____, regarding the construction of a 3 MW AC solar array project for the purposes of generating renewable energy. The property is located in a Rural District at the location of Route 3/Belfast Road in China, Maine. China Tax Map 33, Lot 16 identifies the property. The proposal is permitted with a conditional use permit from the Planning Board.

   Response:

The Applicant has submitted evidence outlining how the proposed project meets the requirements of the Town of China's Land Use Ordinance. Additional information regarding lot coverage is included in Section 4 of the application. The project will require a Stormwater Permit-by-Rule (PBR) from the Maine Department of Environmental Protection. In addition, the Applicant will submit a Surety Bond to meet the Town's requirements and requests this is a condition prior to the issuance of a building permit.

2. **The proposed use will not create fire safety hazards by providing adequate access to the site, or to the buildings on the site, for emergency vehicles.**

   Response:

The proposed project will be accessed by a proposed fourteen (14) foot wide access road off Route 3. The Applicant has included an emergency response plan in the event of an emergency and SunRaise will provide on-site training to emergency personnel at the completion of construction. There will be a fence surrounding the facility and will include Knox Boxes for access by emergency responders. There are no buildings proposed as part of the proposed development.

3. **The proposed exterior lighting will not create hazards to motorists traveling on adjacent public streets, and is adequate for the safety of occupants or users of the site, or will not damage the value and diminish the usability of adjacent properties.**

   Response:

The proposed project does not propose exterior lighting aside from residential style motion sensor lighting.

4. **The provisions for buffers and on-site landscaping will provide adequate protection to neighboring properties from detrimental features of the development.**

   Response:

The site is primarily open field area that has been utilized for loam. The majority of tree clearing will be limited to the center of the parcel. As part of the stormwater management system, the Applicant proposes to maintain meadow buffers to treat impervious runoff.

5. **The proposed use will not have a significant detrimental effect on the use and peaceful enjoyment of abutting property as a result of noise, vibrations, fumes, odor, dust, glare or other cause.**

Response:

The proposed project will be constructed during normal working hours. A noise analysis was conducted by Eric Reuter of Reuter Associates, LLC to determine the decibel levels (dBA) at the property line. The report demonstrates the projected noise levels do not exceed the noise level thresholds for route operations as outlined in Chapter 375, Section 10 of the Site Location of Development Law. The report was based on a larger solar array design and is included in Section 6. The study was based on the grading planning for the site along with the survey data for the surrounding area. All calculations have been based on the assumption that the receiver is downwind of the source - a worst-case condition. The panels will be situated to the south to minimize the potential impacts on adjacent properties. Additional details regarding the anti-reflection technology is included in Section 6.

The project will not result in vibrations, fumes, odor, or dust as a result of the operation and maintenance of the solar array project.

6. **The provisions for vehicular loading and unloading and parking, and for vehicular and pedestrian circulation on the site and onto adjacent public streets will not create hazards to safety.**

Response:

The project site will be accessed by a fourteen (14) foot wide access road that includes an area to turn around by an equipment pad. Once the project is constructed, there will be minimal traffic flow into and out of the site as the solar array is an unmanned operation. The operation consists mainly of inspection and maintenance on a routine basis. There will be limited vehicular loading and unloading and the Applicant does not propose parking areas for the proposed development.

7. **The proposed use will not have a significant detrimental effect on the value of adjacent properties or could be avoided by reasonable modification of the plan.**

Response:

The surrounding area consists of commercial and residential facilities. The project will be located in an existing cleared area that is currently utilized to harvest loam. The site will be reseeded to return the site to meadow buffer. The perimeter of the project will include a chain link fence and gate to prevent unauthorized access to the project. To minimize the visual impact to the surrounding area, the project has been designed to limit the height and visibility of the panels and structures. It is not anticipated that the proposed project will have a detrimental effect on the value of adjacent properties.

8. **The design of the site will not result in significant flood hazards or flood damage or is in conformance with applicable flood hazard protection requirements.**

Response:

The project site is located within Zone X which is defined as an area of minimal flood hazard. A copy of the Federal Emergency Management Agency (FEM) Flood Insurance Rate Map (FIRM) in Section 7. As demonstrated in this Section, the post development peak flow rate will be reduced as a result in a change of ground surface that was previously maintained as a hayfield to an area that will be maintained as a meadow buffer that is not mowed more than twice per year.

9. **Adequate provision has been made for disposal of wastewater, or solid waste, or for the prevention of ground or surface water contamination.**

Response:

The operation of the proposed project does not involve wastewater or solid waste. The project does not propose to utilize, discharge, or extract groundwater during the construction or operation of the solar panels and electrical infrastructure. The project is not located over a mapped sand and gravel aquifer.

10. Adequate provision has been made to control erosion or sedimentation.

Response:

The proposed project includes an erosion and sedimentation plan that meets the Chapter 500 Stormwater Management Law Basic Standards. This includes erosion control measures to prevent erosion and sedimentation during construction and post-construction. Details regarding this plan are included in Section 7. In addition to this, the Applicant has provided technical specification sheets for the proposed hydraulic mulch mix that will be used to stabilize portions of the site. Given the proposed erosion and sedimentation controls, it is not anticipated the proposed project will result in erosion and/or sedimentation.

11. Adequate provision has been made to handle storm water runoff or other drainage problems on the site.

Response:

The proposed project proposes meadow buffers to provide for adequate stormwater management of the impervious area. Additionally, the stormwater management system has been designed to treat the 2, 10, and 25-year storm events.

12. The proposed water supply will meet the demands of the proposed use or for fire protection purposes.

Response:

The proposed project includes a fire suppression system and addition details are included in Section 10. The project does not require water supply for the operation and maintenance of the solar array project.

13. Adequate provision has been made for the transportation, storage, and disposal of hazardous substances and materials as defined by State law.

Response:

The proposed project does not propose the transport or disposal of hazardous substances or materials. The proposed batteries are lithium-ion batteries and are not classified as hazards to the environment. The batteries area self-contained and have little to no fluid within them. MSDS and technical specifications sheets are included in Section 8.

14. The proposed use will not have an adverse impact on significant scenic vistas or on significant wildlife habitat or could be avoided by reasonable modification of the plan.

Response:

The proposed project is not located within a significant wildlife habitat or scenic vista.

15. When located in the Resource Protection District, Stream Protection District, Shoreland District, the proposed use will meet the standards in Section 5 of this Ordinance.

Response:

The proposed project is not located within a Resource Protection District, Stream Protection District, or Shoreland District.

SECTION 4

As a point of clarification, please note that a solar tables consists of twenty (20) individual solar panels. The collection of solar tables constitutes the solar array.

Each table is 33.22' x 11.47 and includes the 30 degree tilt for the table and the associated reduction in the width of the solar table for a total +/- 381.07 square feet per table. There are 507 solar tables for the project for a total area of 193202.5 square feet. Since the ground screws for the solar table are directly below the solar tables, they are subtracted from the area for the solar tables so they are not double counted. That results in a total of 193067.1 square feet for the total area associated with the solar tables.

SOLAR ARRAY LOT COVERAGE SUMMARY
BELFAST ROAD (ROUTE 3), CHINA

LOT COVERAGE (NOT INCLUDING SOLAR ARRAYS)			
	GROUND SCREWS	135.4	S.F.
	CONCRETE PADS	1313.6	S.F.
	TOTAL STRUCTURE	1449.0	S.F.
	TOTAL LOT AREA	1004323.0	S.F.
	% LOT COVERAGE	0.1%	

LOT COVERAGE (INCLUDING SOLAR ARRAYS)			
	SOLAR PANELS	193067.1	S.F.
	GROUND SCREWS	135.4	S.F.
	CONCRETE PADS	1313.6	S.F.
	TOTAL STRUCTURE	194516.1	S.F.
	TOTAL LOT AREA	1004323.0	S.F.
	% LOT COVERAGE	19.4%	

	NUMBER OF ARRAYS	AREA OF ARRAY* (S.F.)	TOTAL AREA (S.F.)
SOLAR PANELS	507	381.07	193202.5
		MINUS GROUND SCREWS AREA	135.4
		TOTAL AREA	**193067.1**

*Includes 30 degree tilt

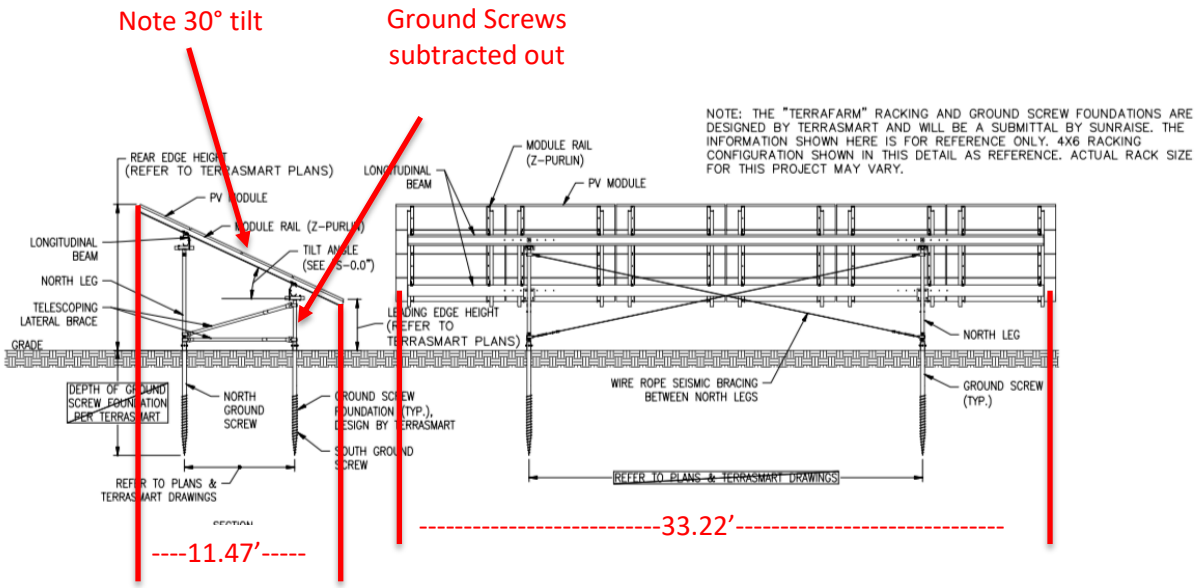
Note 30° tilt
Ground Screws subtracted out
NOTE: THE "TERRAFARM" RACKING AND GROUND SCREW FOUNDATIONS ARE DESIGNED BY TERRASMART AND WILL BE A SUBMITTAL BY SUNRAISE. THE INFORMATION SHOWN HERE IS FOR REFERENCE ONLY. 4X6 RACKING CONFIGURATION SHOWN IN THIS DETAIL AS REFERENCE. ACTUAL RACK SIZE FOR THIS PROJECT MAY VARY.
REAR EDGE HEIGHT (REFER TO TERRASMART PLANS)
PV MODULE
MODULE RAIL (Z-PURLIN)
LONGITUDINAL BEAM
NORTH LEG
TELESCOPING LATERAL BRACE
GRADE
LEADING EDGE HEIGHT (REFER TO TERRASMART PLANS)
NORTH GROUND SCREW
SOUTH GROUND SCREW
REFER TO PLANS & TERRASMART DRAWINGS
WIRE ROPE SEISMIC BRACING BETWEEN NORTH LEGS
GROUND SCREW (TYP.)
----11.47'-----
----------33.22'----------

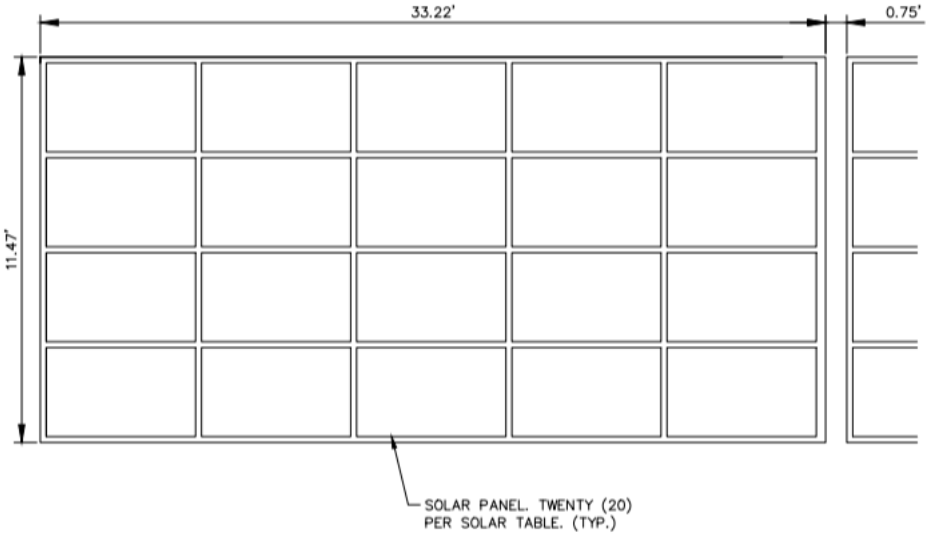
33.22'
0.75'
11.47'
SOLAR PANEL. TWENTY (20) PER SOLAR TABLE. (TYP.)

General Information – Operation and Maintenance

The purpose of this plan is to discuss the procedures that will be implemented in the event of an emergency during the operation of the Route 3 Solar project.

1. Project Description

SunRaise Development, LLC will operate and maintain the 3 megawatt-AC solar photovoltaic (PV) system and energy storage system, located off Route 3, South China, ME. The project's primary components include approximately 10,100 PV modules mounted on a fixed tilt racking system, solar inverters and containers housing Li-Ion batteries. Other Project components include electrical cables, conduit, electrical cabinets, switchgears, step-up transformers, inverters, SCADA systems and metering equipment.

2. Project Team Contact Info

The operation and maintenance contract for the Belfast Solar project is not awarded at this time. Prior to operation, SunRaise Developments, LLC will distribute a more comprehensive Emergency Response Plan which will include contact information for the O&M Contractor. In the event of an emergency SunRaise Development, LLC should be notified. The project team will consist of:

Primary O&M Contact	Matthew Doubleday	(603) 852-2318	matt@sunraiseinvestments.com
Secondary O&M Contact	Kevin Corbett	(781) 698-6093	kevin@sunraiseinvestments.com
Tertiary O&M Contact	Patrick Jackson	(603) 969-8492	pat@sunraiseinvestments.com

3. Emergency Response Jurisdictions

The project site is within the jurisdictional boundary of the town of China and Kennebec County. In the event of an emergency **Dial 911** and the following departments should be notified:

South China Fire Department	PO Box 325, China, ME 04358	Dick Morse (207) 445-2948
Kennebec County Sheriff's Office	125 State Street, Augusta, ME 04330	(207) 623-3614
China Public Works	211 Alder Park Road, China, ME 04358	(207) 445-2014
Maine State Police	198 Maine Ace, Bangor, ME 04401	(207) 624-7076

Fire Prevention

1. Understanding Conditions Associated with Photovoltaic Solar Arrays

Photovoltaic (PV) solar arrays present a unique challenge for fire fighters. Unlike a typical electrical or gas utility, a PV array does not have a single point of disconnect. Whereas there are disconnects that will de-energize select parts of the system, as long as the PV panels are illuminated, the individual strings of PV panels are energized and capable of producing up to 1,500 volts. This is not just limited to PV panels being illuminated by the sun; illumination by artificial light sources, such as fire department lights, or the light for the fire itself are capable of producing electrical power sufficient to cause a lock-on hazard (Source: UL Firefighter Safety and Photovoltaic Installations Research Project, November 29, 2011). Below is a summary of the hazards associated with firefighting activities in photovoltaic solar arrays:

- Shock hazard due to the presence of water and PV power during suppression activities
    - Outdoor rated electrical enclosures may not resist water intrusion from the high pressure stream of a fire hose.
    - PV panels damaged in the fire may not resist water intrusion.
    - Damaged conductors may not resist water intrusion
- Shock hazard due to direct contact with energized components
    - No means of complete electrical disconnect.

Due to the dangers presented above, it is not typical to practice fire suppression by means of water inundation within solar PV arrays.

Site Specific Emergency and Safety Plan

Prior to energization, the construction management team will provide a site-specific plan to all emergency response departments. This will include a plan depicting the locations of all disconnects, gates and overview of how the system operates. A training will be offered on-site to any personnel that would like to attend.

Reuter Associates LLC
CONSULTANTS IN ACOUSTICS

10 Vaughan Mall, Suite 201A
Portsmouth, NH 03801
603-430-2081

January 28, 2020

Planning Board
Town of China
571 Lakeview Drive
China, ME 04358

SUBJECT: Route 3 Solar Array Project – Noise Study

Dear Members,

At the request of SunRaise Investments, LLC, I have conducted a study of noise impacts from the proposed Route 3 solar array project in China.

Sound Level Limits

Sound level limits for new developments in the State of Maine are regulated by the Maine Department of Environmental Protection (MDEP) regulation, Chapter 375.10. Sound level limits are provided for both daytime (7 a.m. to 7 p.m.) and nighttime. The specific limits are based on zoning, proximity of critical receptors, and existing sound levels in the environment.

For a typical development, existing sound levels would be measured to establish a baseline from which the appropriate limits would be selected. However, monitoring of existing conditions may be omitted if predicted sound levels from the development fall below 50 dBA during daytime hours and 40 dBA overnight (375.10(C)(1)(vi)).

Proposed Equipment

The proposed solar array includes three types of equipment that generate noise:

- Sungrow SG125HV String Inverter (quantity 40)
- Sungrow SC1000KU Central Inverter (quantity 3)
- Sungrow GA-30BQ-UL Cooling System (quantity 3)
- Transformers ranging from 1200 kVA to 2500 kVA (quantity 4)

Sungrow has provided sound level data for each of these devices as broadband A-weighted sound levels. No octave- or third-octave band data are available. As such, it is unknown whether emissions from any of these devices falls under the MDEP definition of tonal noise.

Transformer sound levels were assumed to be at or below the limits of NEMA TR-1, Table 2.

All of the provided data represent sound levels emitted under full load. It is important to note that these devices only generate noise when the sun is up, and sound levels are proportional to load. The daytime property-line limit of 50 dBA has therefore been used for this analysis. It is assumed that noise emissions will be negligible before 7 a.m. and after 7 p.m.

Modeling

The A-weighted measurements provided by the manufacturer were used to estimate sound power levels. Based on these data, the proposed equipment locations, and site topography, a computer model of the site was constructed in SoundPLAN, and industry-standard application for modeling outdoor noise propagation. Calculations were based on ISO 9613-2 *Attenuation of Sound During Propagation Outdoors*.

The attached Figure 1 presents the results of the SoundPLAN model. The 50-dBA contour is shown in red and is well within the site boundaries.

Summary

Based on the sound level data provided by the manufacturer, the proposed solar array is expected to comply with the most restrictive MDEP sound level limits of 50 dBA (day) and 40 dBA (night).

Please feel free to contact me with any questions.

Sincerely,

Eric L. Reuter, INCE Bd. Cert.
Principal

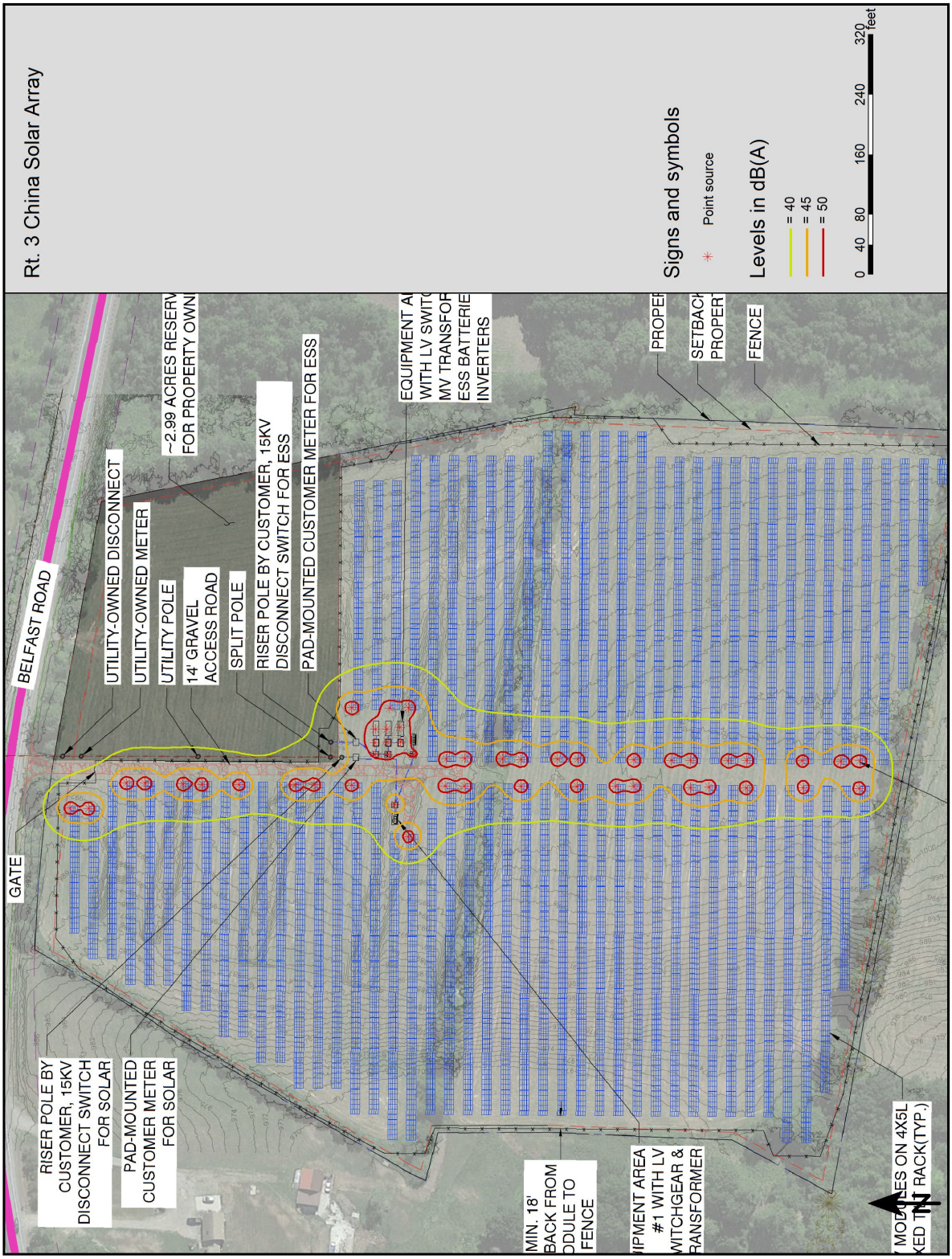
Rt. 3 China Solar Array
BELFAST ROAD
GATE
RISER POLE BY CUSTOMER, 15KV DISCONNECT SWITCH FOR SOLAR
PAD-MOUNTED CUSTOMER METER FOR SOLAR
UTILITY-OWNED DISCONNECT
UTILITY-OWNED METER
UTILITY POLE
14' GRAVEL ACCESS ROAD
SPLIT POLE
~2.99 ACRES RESERV
FOR PROPERTY OWN
RISER POLE BY CUSTOMER, 15KV DISCONNECT SWITCH FOR ESS
PAD-MOUNTED CUSTOMER METER FOR ESS
EQUIPMENT A
WITH LV SWITC
MV TRANSFOR
ESS BATTERIE
INVERTERS
PROPER
SETBACK
PROPER
FENCE
MIN. 18'
BACK FROM
DULE TO
FENCE
IPMENT AREA
#1 WITH LV
WITCHGEAR &
RANSFORMER
MODULES ON 4X5L
KED TILT RACK(TYP.)
N
Signs and symbols
Point source
Levels in dB(A)
= 40
= 45
= 50
0 40 80 160 240 320 feet

Figure 1

PV MODULE REFLECTION – GLARE

PV MODULE REFLECTION – GLARE

When light falls on a surface it is split; some of the light traverses the surface (transmission), some light enters the surface and is lost (absorption) and some is redirected away from the surface (reflection). In order for a PV module to produce as much power as possible, the cover glass is optimized for high transmission. This is why Hanwha Q CELLS PV modules have cutting-edge anti-reflective coatings (ARC) in order to maximize transmission and limiting the possibility for reflections.

Each of these actions, transmission, absorption and reflection, can be measured as a proportion of the original light falling on the surface, eg. T + A + R = 100 %. For our purposes it is only necessary to look at the proportion of this original light, as the intensity of the light falling on the surface of the PV module glass will change with numerous factors including different system configurations, locations and times of both the day and year.

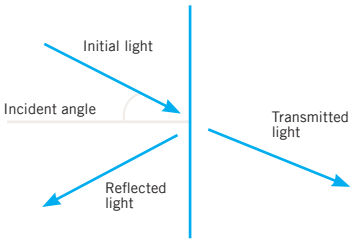

Figure 1: Light falling on a surface

The proportion of light reflected from any surface is dependent upon the angle at which the light hits the glass, called the incident angle where 0° is direct light and 90° is parallel to the surface. The proportion of reflected light can be calculated for different incident angles using the Fresnel equations. For a sheet of glass it would be necessary to calculate the reflection twice, once for the frontside of the glass and once for the backside. However as the rear of PV module glass is connected to an EVA and light absorbing PV cell it is only necessary to consider the frontside effect. To calculate the reflection the refractive index of the involved media is needed. As an example air has an index of 1, for normal "window" glass the value is around 1.5, for water it is 1.33 and for PV module glass it is around 1.25. From these figures alone it is possible to, correctly, presume that the glass used in PV modules creates less reflected light than normal "window" glass or a body of water. Figure 2 shows the curves of these different cases, along with measurements by TÜV Rheinland of Hanwha Q CELLS modules. It can be seen that the proportion of light reflected starts close to zero but rises as the incident angle gets closer to 90°.

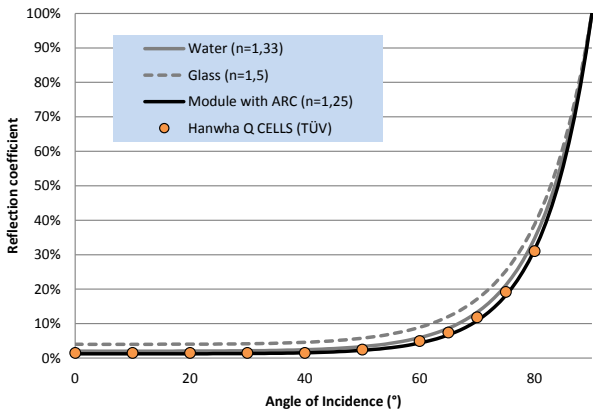

Figure 2: Reflection vs. incident angle

CONCLUSION

From both the theoretical and measured data it is clear that ARC glass used in all Hanwha Q CELLS currently produced PV modules reflects less light than both naturally occurring features, such as bodies of water, and common manmade structures. Moreover for incident angles below 55° less than 4 % of the initial light is reflected away from the PV module.

EMAIL: service@q-cells.com
TEL: +49 (0)3494 66 99 23222

Specifications subject to technical changes © **Hanwha Q CELLS** Module_reflection_2017-02_Rev01_EN

STATE OF MAINE
JOSEPH J. MARDEN
No. 12628
LICENSED
PROFESSIONAL ENGINEER
03-09-20

Stormwater Management Plan
Solar Array
Belfast Road (Route 3), China, Maine

Introduction

SunRaise Development, LLC (herein referred to as Applicant) is proposing construction of a large solar array with associated access drives and equipment pads. The proposed development will result in approximately 11,067 sq. ft. (0.25 acres) of impervious area which consist of a new access drive and two (2) crushed stone pads that contain concrete pads for the necessary electrical equipment.

As the project results in more than an acre of disturbance, a stormwater permit-by-rule will be required from the Maine Department of Environmental Protection (MDEP).

In accordance with Chapter 4 of the China Land Use Ordinance, the project is required to meet the phosphorus export standards as it discharges to the watershed of the China Lake (East Basin). In accordance with Chapter 2 of the China Land Use Ordinance, the project *"shall be designed to minimize storm water runoff from the site in excess of the natural pre-development conditions. Where possible, existing natural runoff control features, such as berms, swales, terraces, and wooded areas, shall be retained in order to reduce runoff and encourage infiltration of storm waters."*

This stormwater management plan has been designed in accordance with the Town standards to mitigate any stormwater runoff impacts from the project and direct the stormwater runoff to existing drainage water courses and avoid impacts to abutting properties.

Study Methodology

Topographical data was obtained from LiDAR topography, supplemented with contours obtained from drone aerial photography. Hydrologic boundaries were generated using the topographic mapping and the drainage patterns were verified by a site reconnaissance visit.

Surficial soils located in the vicinity of the site were obtained from the United States Department of Agriculture Natural Resources Conservation Service Soil Survey Geographic (SSURGO) Database. The Applicant's parcel includes the soil classifications listed below. Soils units found in the vicinity of the access road and equipment pads to be developed are primarily Woodbridge and Paxton-Charlton.

SOILS TYPES IN LOCAL STUDY AREA

Soils Series	Symbol(s)	Hydrologic Group (HSG) **
Lyman-Abram-Rock	HtC	D
Lyman-Tunbridge	HrC	C/D
Paxton-Charlton	PdB	B/C
Ridgebury	RcA, RdA	D
Woodbridge	WrB, WsB	C/D

**Hydrologic Soils Group taken from SCS TR-55 Manual

Stormwater Quantity

The project area is located in Areas of Minimal Flooding of the Flood Insurance Rate Maps (FIRMs) for Kennebec County, Maine. The project area is located on Community Panel 23011C0395D,

Effective June 16, 2011. An excerpt of the applicable FIRM is included as an Attachment to this report. There is no impact from flooding anticipated for this project.

Off-Site Watersheds

The watershed area analyzed for the pre- and post-development analysis consists of the entirety of the property. There is a high point on the property that splits the watersheds on the property. The westerly portion of the property drains westerly towards an off-site unnamed tributary. The easterly portion of the property drains easterly towards an off-site drainage swale that eventually discharges towards China Lake. There are no off-site watersheds which drain through, or otherwise impact, the proposed project.

Stormwater Analysis Subcatchments

Pre-Development Conditions

A summary of the subcatchments is provided below:

Subcatchment 1 represents approximately 12.76 acres comprised of woodland, pasture, and portion of Route 3. Stormwater runoff is conveyed overland northwesterly towards a drainage swale that discharges westerly towards an unnamed tributary (POI#1).

Subcatchment 2 represents approximately 10.97 acres comprised of woodland, pasture, and portion of Route 3. Stormwater runoff is conveyed overland northeasterly towards a drainage swale that discharges westerly towards China Lake (POI#2).

Post-Development Conditions

Under post-development conditions, an access road and equipment pads will be constructed, resulting in approximately 11,067 s.f. (0.25 acres) of new impervious area. Stormwater runoff from the developed area will be directed to areas maintained in conformance with MDEP meadow buffers or, in the case of the equipment pad areas, will be retained within the crushed stone areas and infiltrated into the existing soils for treatment and attenuation of the anticipated flows. A summary of the subcatchments is provided below:

Subcatchment 10 represents approximately 12.10 acres comprised of woodland, meadow, a portion of Route 3, a portion of the new access drive, and the ground screws for the solar tables. Stormwater runoff is conveyed overland northwesterly towards a drainage swale that discharges westerly towards an unnamed tributary (POI#1).

Subcatchment 11 represents approximately 11.49 acres comprised of woodland, meadow, a portion of Route 3, a portion of the new access drive, and the ground screws for the solar tables. Stormwater runoff is conveyed overland northeasterly towards a drainage swale that discharges westerly towards China Lake (POI#2).

Subcatchment 20 represents approximately 0.02 acres comprised of crushed stone and concrete pads. Stormwater runoff is conveyed to the surrounding crushed stone areas and infiltrated into the existing soils.

Subcatchment 21 represents approximately 0.12 acres comprised of crushed stone and concrete pads. Stormwater runoff is conveyed to the surrounding crushed stone areas and infiltrated into the existing soils.

Results

A comparison of pre- and post-development peak stormwater runoff rates at the Points of Interests are presented in the following table. Peak runoff rates were estimated for the 2, 10, and 25-year, 24-hour storm events. Point of Interest 1 consists of the stormwater directed towards the western side of the property which discharges to an unnamed tributary. Point of Interest 2 consists of the stormwater directed towards the eastern side of the property which ultimately discharges towards China Lake.

	POI#1			POI#2		
Design Storm	Pre (cfs)	Post (cfs)	Change (cfs)	Pre (cfs)	Post (cfs)	Change (cfs)
2-Year	8.99	7.52	-1.47	10.07	9.40	-0.67
10-Year	19.30	16.83	-2.47	20.49	19.96	-0.53
25-Year	27.32	24.20	-3.12	28.42	28.11	-0.31

As shown in the table, the peak runoff rates are decreased in the 2-, 10-, and 25- storm events at both point of interests as a result of the proposed development. The decrease in the peak runoff rates is mostly due to the change of ground surface from a field that was previously maintained as a hayfield to an area that will be maintained in conformance with a meadow buffer that is not mowed more than twice per year.

Phosphorus Control

Although the property consists of 23.06 acres, only a portion of the property drains towards the China Lake Watershed. In the Pre-Development condition, only 10.56 acres from the property drains towards the China Lake Watershed. As the Phosphorus Control standards are only related to stormwater runoff that is discharged towards the China Lake Watershed, the calculations provided are only based on the 10.97 acres draining towards the China Lake Watershed. Although the project will result in approximately 11,067 s.f. (0.25 acres) of new impervious area, only 1,245 s.f. (0.03 acres) of the impervious is located within the watershed directed towards China Lake. This includes equipment pad areas and the ground screws which anchor the solar tables.

In accordance with Chapter 4 of the China Land Use Ordinance, the project is required to meet the phosphorus export standards as a portion of the project discharges to the watershed of the China Lake (East Basin). Based on Section 3 of the Phosphorus Control Ordinance, the project shall limit the phosphorus export to 0.034 pounds of phosphorous/acre/year. To accomplish this, the project is required to implement design choices or BMPs to minimize the phosphorus discharging towards China Lake.

Enclosed with this Stormwater Management Plan are worksheets, developed by MDEP, which detail the Project Phosphorus Budget (PPB) for the project, as well as the Pre-Treatment Project Phosphorus Export (Pre-PPE) and Post-Treatment Project Phosphorus Export (Post-PPE).

A summary of the findings is provided in the table below:

Phosphorus Analysis		
Project Phosphorus Budget	0.36	lbs P/year
Pre-Treatment Project Phosphorus Export	0.07	lbs P/year
Post-Treatment Project Phosphorus Export	0.01	lbs P/year

As shown in the table above, the Pre-PPE levels are below the PPB for the project (0.07 vs. 0.36). As part of the project, the equipment pads and crushed stone will be drained into the crushed stone and underlying subbase gravels and infiltrated into the existing soils. It should be noted that, for the stormwater quantity analysis addressed previously, it was assumed that the portions of the property that are not the access road or equipment pads will be maintained in a meadow-type condition. This assumes that the grass will not be mowed more than twice per year, which is in conformance with the MDEP guidelines for a meadow buffer. A note, indicating such, is provided within the plan set. It should be noted that, in conformance with MDEP standards, the solar panels are not counted towards impervious area as they do not restrict the flow of stormwater into the ground as they are elevated off the ground. Per the request of the Town of China Planning Board, they are included within the phosphorus calculations, but are allocated a phosphorus export coefficient of 0.0.

Based upon the stormwater analysis, and subsequent conversations with MDEP, that were completed as part of the approved solar array project off Route 32 in China, the primary concern for phosphorus from the project is during the construction process, and specifically for areas that are being converted from woods to meadow. For this project, only a small portion of the development area is forested, but a large portion of the previously grassed areas are bare earth now due to topsoil removal on the property. Because of that, we would still recommend that a third-party inspector be utilized to ensure that the portions of the property that are disturbed are stabilized are returned to a meadow condition as soon as possible.

Due to the portions of the property that are bare soil, as shown on the plan set for the project, we are recommending additional erosion control measures to stabilize the property until the site can be revegetated. These measures include application of a hydraulic mulch mix upon completion of the installation of the solar tables. The recommended hydraulic mulch mix for stabilization of the disturbed areas is GeoPerm Bonded Fiber Matrix made by GeoEnvironmental. Technical sheets for the product are enclosed with this report.

Conclusion

Through the implementation of erosion and sedimentation control measures and limiting the impervious area and developed areas on the property, the project complies with the requirements of the China Land Use Ordinance. This includes minimizing the stormwater runoff from the site to pre-development conditions and ensuring that the phosphorus export from the project site is in conformance with the PPB provided within the Ordinances.

Attachment A – FEMA Flood Map
Attachment B – China Lake Watershed Map
Attachment C – Letter from Don Witherill
Attachment D – Photographs of Solar Array
Attachment E – GeoPerm Bonded Fiber Matric Technical Sheets
Attachment F – Phosphorus Worksheets
Attachment G – Pre- and Post-Development HydroCAD Report
Attachment H – Pre- and Post-Development Watershed Plans

National Flood Hazard Layer FIRMette

FEMA

44°24'43.89"N

69°31'51.12"W

69°31'13.66"W

44°24'18.19"N

0 250 500 1,000 1,500 2,000 Feet

1:6,000

Legend

SEE FIS REPORT FOR DETAILED LEGEND AND INDEX MAP FOR FIRM PANEL LAYOUT

SPECIAL FLOOD HAZARD AREAS
- Without Base Flood Elevation (BFE) *Zone A, V, A99*
- With BFE or Depth *Zone AE, AO, AH, VE, AR*
- Regulatory Floodway

OTHER AREAS OF FLOOD HAZARD
- 0.2% Annual Chance Flood Hazard, Areas of 1% annual chance flood with average depth less than one foot or with drainage areas of less than one square mile *Zone X*
- Future Conditions 1% Annual Chance Flood Hazard *Zone X*
- Area with Reduced Flood Risk due to Levee. See Notes. *Zone X*
- Area with Flood Risk due to Levee *Zone D*

OTHER AREAS
- NO SCREEN Area of Minimal Flood Hazard *Zone X*
- Effective LOMRs
- Area of Undetermined Flood Hazard *Zone D*

GENERAL STRUCTURES
- Channel, Culvert, or Storm Sewer
- Levee, Dike, or Floodwall

OTHER FEATURES
- 20.2 / 17.5 Cross Sections with 1% Annual Chance Water Surface Elevation
- Coastal Transect
- 513 Base Flood Elevation Line (BFE)
- Limit of Study
- Jurisdiction Boundary
- Coastal Transect Baseline
- Profile Baseline
- Hydrographic Feature

MAP PANELS
- Digital Data Available
- No Digital Data Available
- Unmapped

N

The pin displayed on the map is an approximate point selected by the user and does not represent an authoritative property location.

This map complies with FEMA's standards for the use of digital flood maps if it is not void as described below. The basemap shown complies with FEMA's basemap accuracy standards

The flood hazard information is derived directly from the authoritative NFHL web services provided by FEMA. This map was exported on 1/25/2020 at 9:34:50 AM and does not reflect changes or amendments subsequent to this date and time. The NFHL and effective information may change or become superseded by new data over time.

This map image is void if the one or more of the following map elements do not appear: basemap imagery, flood zone labels, legend, scale bar, map creation date, community identifiers, FIRM panel number, and FIRM effective date. Map images for unmapped and unmodernized areas cannot be used for regulatory purposes.

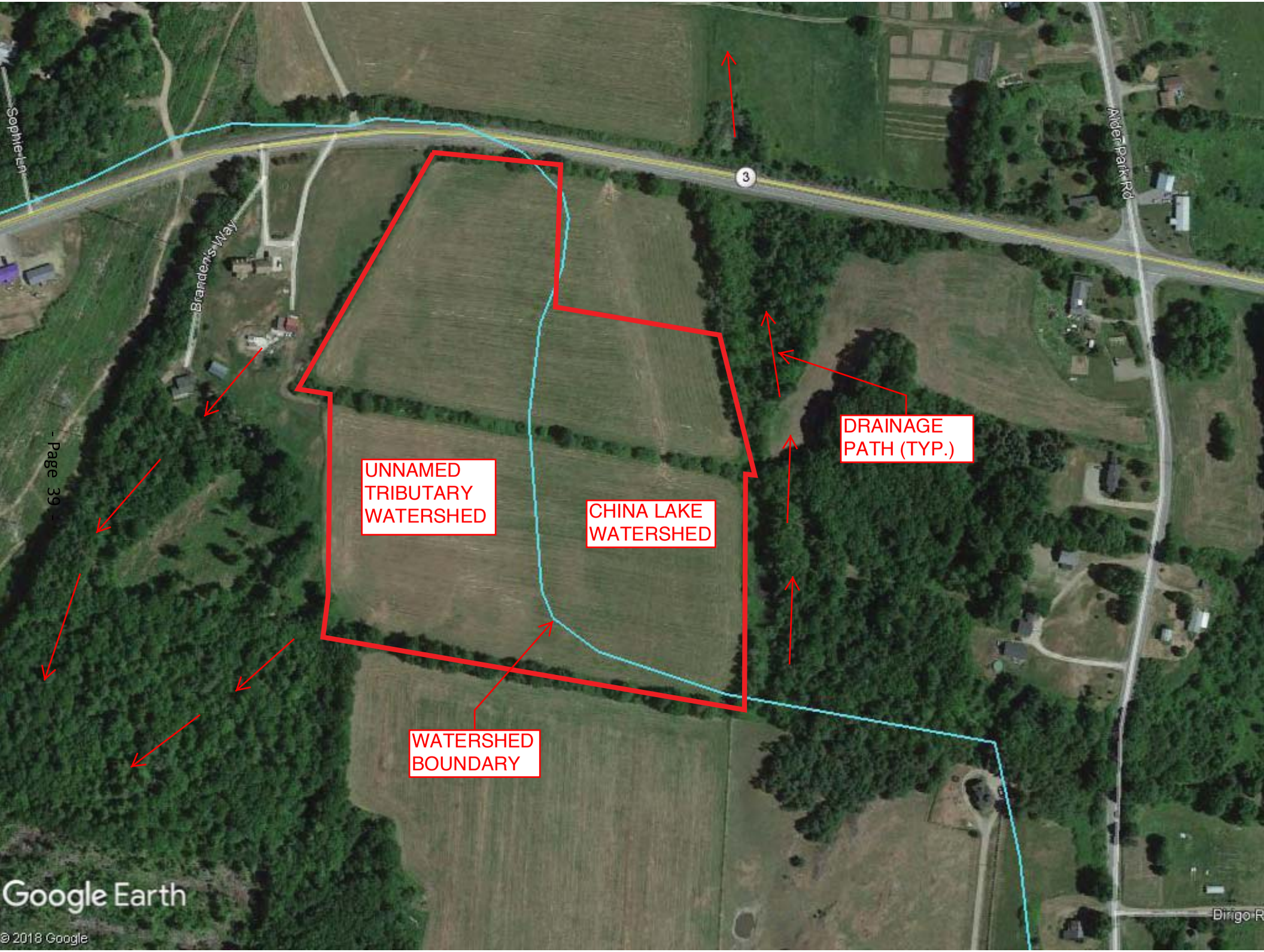
Sophie Ln
Brandens Way
3
Alder Park Rd
UNNAMED
TRIBUTARY
WATERSHED
CHINA LAKE
WATERSHED
DRAINAGE
PATH (TYP.)
WATERSHED
BOUNDARY
Dirigo R
Google Earth
© 2018 Google

June 5, 2008

Roy Koster
Central Maine Power
83 Edison Drive
Augusta, ME 04336

RE: DEP Stormwater Management Regulations and how they apply to Central Maine Power Company Substations and Switchyards

Dear Mr. Koster:

I am writing to provide clarification on how substations and switchyards designed by Central Maine Power Company (CMP) can meet DEP Stormwater Management rules, Chapter 500 and the Site Location of Development Law. This letter supersedes a previous DEP letter on this subject dated February 29, 2008 and is a follow-up to further discussions between CMP and DEP staff.

Based on the report prepared by John Simon of Balance Engineering, dated March 8, 2008, regarding the stormwater runoff coefficient at CMP substations and switchyards, the required gravel fill and surface nature of these structures performs differently than most common construction practices and a modeling variance will be allowed for CMP substations and switchyards as follows:

When Flooding Standard requirements apply to a CMP project, modeling must demonstrate that peak runoff from the substation structure does not exceed predevelopment flow rates at the property line. Because of the permeability plus storage within the gravel fill and roughness of the crushed rock surface, the curve number (CN) specified in John Simon's report (March 2008) may be used for the substation area. As reported, a CN of 55 may be used for substations and switchyards that are built on areas that are mapped as HSG "A", "B", and "C", and a CN of 60 must be used when the area is mapped as HSG "D" for the HydroCAD model. However, all impervious surfaces will have to be added for an averaged curve number.

The General Standards of Chapter 500 (water quality) will be considered as met by the CMP substation/switchyard design specifications as long as the structure includes the typical CMP substation profile overlaying the natural ground surface. The soil layers within the CMP substation profile consist of 4 inches of crushed stone, 50:50 mix of 1.5"

and 0.75" diameter stone overlaying 18 inches or more of gravel fill, MDOT 703.06 Type A. Saturation within the granular fill will detain and provide treatment for the one-inch design standard under that requirement. Groundwater can never be any higher than 18 inches below the top of the gravel fill. Other treatment considerations will need to be provided for all impervious structures anticipated on the substation and switchyard and for the roadway.

The Basic Standards of Chapter 500 (erosion and sedimentation control, inspection and maintenance, and housekeeping) will be met by the standard CMP substation and switchyard design specification and erosion control/construction plan as developed by CMP for each Stormwater Management application. These are minimum erosion control measures that will need to be maintained until the site is fully stabilized. However, based on site and weather conditions during construction, additional erosion control measures may be needed.

While there are several ways to approach the design standards discussed above, these must be considered the minimum requirements in meeting the Stormwater Management and Site Location of Development Laws. However, in some situations where the local hydrology and site conditions warrant more resource protection, additional BMPs may be required. Also, the access drive and associated roadside swales are included in the disturbed area for permitting purposes and the treatment of these areas must be addressed separately from the substation or switchyard and be treated with standard practices. The natural hydrology of these areas will need to be maintained and will have to meet all applicable standards as established in Chapter 500 (page 11, Section 5).

I hope this addresses your request and will make the DEP permitting process more straight forward. If you have further questions, please contact Marianne Hubert at (207) 287-4140.

Sincerely,

Don Witherill, Director
Watershed Management Division
Bureau of Land and Water Quality

Cc: Marianne Hubert, PE, DEP program manager
Andy Fisk, DEP L&W Bureau Director
Dan Butler, PE, TRC
Gerry Mirabile, CMP

SOLAR ARRAY PHOTOGRAPHS

Photograph 1: Solar Array (Note Breaks Between Individual Panels)

Photograph 2: Underneath Solar Array (Note Breaks Between Individual Panels)

Technical Sheet

GeoPerm – BFM (Bonded Fiber Matrix)

Hydraulic Mulch — Wood with Tack

Description - GeoMatrixSS Fibers® are fully biodegradable, High Performance Hydraulic Mulch (HM) Is composed of 100% recycled Thermally Refined™ Poplar / Eastern White Pine wood fibers and a bonding agent. The HPHM is phyto-sanitized, free from plastic netting, and upon application forms an intimate bond with the soil surface to create a porous and absorbent layer that enhances germination and plant growth.

Recommended Applications

- Erosion control and re-vegetation for steep slopes (Greater Than 3H: 1V)
- Rough graded slopes
- Enhancement of vegetation establishment

Technical Data

Physical Properties*	Test Method	Units	Minimum Value
Water Holding Capacity	ASTM D7367	%	1200
Moisture Content	Scale	%	+/- 10
Material Color	Observed	n/a	Brown

Performance Properties*	Test Method	Units	Value
Cover Factor[1]	Large Scale[2]	n/a	.50 maximum
Percent Effectiveness[3]	Large Scale[2]	%	.50 minimum

Environmental Properties*	Test Method	Units	Typical Value
Functional Longevity[4]	ASTM D5338	n/a	Up to 8 months
Ecotoxicity	EPA 2021.0	%	96-hr LC50 > 100%
Biodegradability	ASTM D5338	%	100

Product Composition	Typical Value
Thermally Processed Wood Fiber[5]	90%
Blended Hydro-Colloidal Based Tackifier	10%

* When uniformly applied at a rate of 4100 pounds per acre (4554 kilograms/hectare) under laboratory conditions.
1. loss ratio of treated surface versus an untreated control surface. 2. Large scale testing conducted at Utah Water Research Laboratory. For specific testing information please contact a Geoenviro technical service representative at 508.987.3548. 3. % Effectiveness = One minus Cover Factor multiplie by 100%. 4. Functional Longevity is the estimated time period, based upon ASTM D5338 testing and field observations, that a material can be anticipated to provide erosion control and agronomic benefits as influenced by composition, as well as site-specific conditions, including; but not limited to – temperature, moisture, light conditions, soils, biological activity, vegetative establishment and other environmental factors. 5. Heated within a pressurized vessel to a temperature greater than 380 degrees Fahrenheit (193 degrees Celsius) for 5 minutes at a pressure greater than 50 psi (345 kPa) in order to be Thermally Refined™/Processed and to achieve phyto-sanitization.

Packaging Data:

Properties	Test Method	Units	Nominal Value
Bag Weight	Scale	kg (lb)	22.7 (50)
Bags per Pallet	Observed	#	40

UV and weather-resistant plastic bags. Pallets are weather-proof stretch wrapped with UV resistant pallet cover.

GeoEnvironmental, Inc.
1551 Global Ct
Sarasota, FL
941.371.9858
www.geoenviro.net

To the best of our knowledge, the information contained herein is accurate GeoEnviromental cannot assume any liability whatsoever for the accuracy or completeness thereof. Final determination of the suitability of any information of the use or material for the use contemplated, of its manner of use and whether the suggested use infringes any patents is the sole responsibility of the user.

GeoPerm

BONDED FIBER MATRIX

{ INNOVATION VALUE SERVICE }

THE SMART

way to eliminate soil erosion, grow grass & produce a healthy turf for your projects.

Why is it the most effective sprayed-on erosion control & turf enhancing product?

The method employed in processing the wood fiber in GeoPerm™ is key to the superior performance of the product when exposed to the rigors of Mother Nature. A thermo-mechanical defibration process is utilized to bring a wood chip down to millions of thin fibers. This advanced method creates longer, flatter fibers that will conform to the soil surface and create a stable mechanical interlocking bond. A thinner fiber also increases the overall volume of fibers per square inch improving the adhesion and water holding capacity.

GeoPerm™ has the ability to absorb more moisture because of multiple resin ducts found in the softwood species of wood fiber used in production of the mulch. When the GeoPerm™ fiber is treated under high-pressure steam, the resin ducts in the wood soften and swell to create large vacuoles or pores. The fibers are then ready to absorb many times their weight in water and slowly release the moisture to the new vegetation.

Chemical Composition

GeoPerm™ contains chemical components that do not dissolve in rain water, until vegetation is established. A precise combination of blended proprietary additives and cross linking agents react to form resilient interlocking bonds. When these components are united in the mixing process (within the hydro mulcher), they exponentially increase the tensile strength of the GeoPerm™ fiber matrix.

Upon application to the soil surface, these proprietary ingredients adhere the GeoPerm™ slurry to the existing soil structure, creating a strong permeable mat that is extremely resistant to erosion.

Results from field trials and university testing supports and confirms the bonding capabilities of GeoPerm™. In addition to the hydrocolloidal (polysaccharides) and crosslinker, other ingredients are included in the GeoPerm™ formulation to provide benefits such as viscosity control, improved dispersion of hydrocolloids, reduced foaming, improved water retention and increased wettability of fiber.

GeoPerm™ applied on 2:1 Slopes

Density of the softwood fibers: Thousands of fibers per sq. ft.

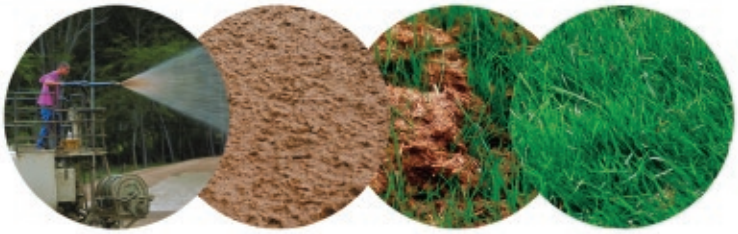

Stage 1. **Stage 2.** **Stage 3.** **Stage 4.**

GeoPerm™ Advantages

- Stabilizing steep and severe slopes
- Replaces sod and erosion control blankets
- Enhances turf establishment
- Prevents migration of soil and seeds
- 100% biodegradable

GeoPerm™ Properties	
Package Weight	50 lbs
Water Holding Capacity	15 times its weight in water
Mineral Activators	10% Based on Soil Chemistry
Application Rate	3000-4100 lb per Acre based on Soil Composition

Conclusion

Erosion Control testing, field trials and extensive usage throughout many regions confirm GeoPerm™ provides outstanding protection from water runoff, soil and seed loss while retaining the expediency of a hydraulically-applied erosion control product.

Call now or visit our website
Tel. 1.508.987.3548
www.geoenviro.net

AUTHORIZED DEALER

GeoEnvironmental™
Products Protecting the Environment

Corporate Headquarters
157 Southbridge Road, North Oxford, MA 01537 USA
Tel: 1.508.987.3548 Fax: 1.508.987.7646
Web: www.geoenviro.net Email: info@geoinviro.net

Florida Office
1551 Global Court, Sarasota, Florida 34240
Tel: 941.371.9858 Fax: 941.377.3522

Utah State University Erosion Control Labs

Re: Comparing GeoPerm BFM to Rolled Erosion Control Blankets

Functional equivalency of GeoPerm Bonded Fiber Matrix (BFM) in comparison to rolled Erosion Control Blankets (ECB). Given the existing design and installation requirements, GeoPerm BFM would suffice as a functional equivalent to Erosion Control Blankets.

According to the Erosion Control Technology Council (ECTC), the following definitions exist for BFMs and ECBs.

1. **Bonded Fiber Matrix (BFM)** A hydraulically-applied matrix containing organic defibrated fibers and cross-linked insoluble hydro-colloidal tackifiers to provide erosion control and facilitate vegetation establishment on steep slopes and designed to be functional for a minimum of 6 months.
2. **Erosion Control Blanket (ECB)** A temporary degradable rolled erosion control product composed of processed natural or polymer fibers mechanically, structurally or chemically bound together to form a continuous matrix to provide erosion control and facilitate vegetation establishment.

Both of the above definitions provide for a product that consists of fibers that are mechanically or chemically bound together to form a continuous matrix to provide erosion control and facilitate vegetation establishment.

In addition to being designed to perform the same functions as an ECB, GeoPerm BFM has the following advantages:

1. Superior vegetation establishment – 2-3 times more effective than ECBs (See Figure 1)
2. Superior erosion control – Approximately 16 times more effective than ECBs (See Figure 2)
3. No tenting or rilling
4. Faster application than ECBs – less soil preparation
5. Can be used on rough soil surfaces – less soil disturbance
6. Choice of custom seed or sprig blends
7. Wildlife safe – no nets, threads or staples to entangle wildlife or mowing equipment

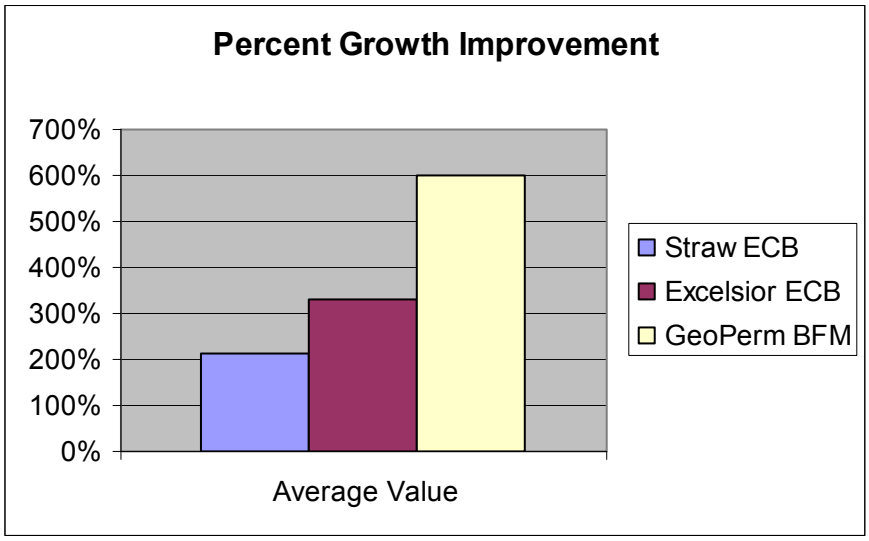

Figure 1: GeoPerm BFM vs. ECBs - Percent Growth Improvement*

* ECB data based on ASTM D7322 Testing from industry leading single-net straw and excelsior erosion control blankets from public AASHTO-NTPEP reports.

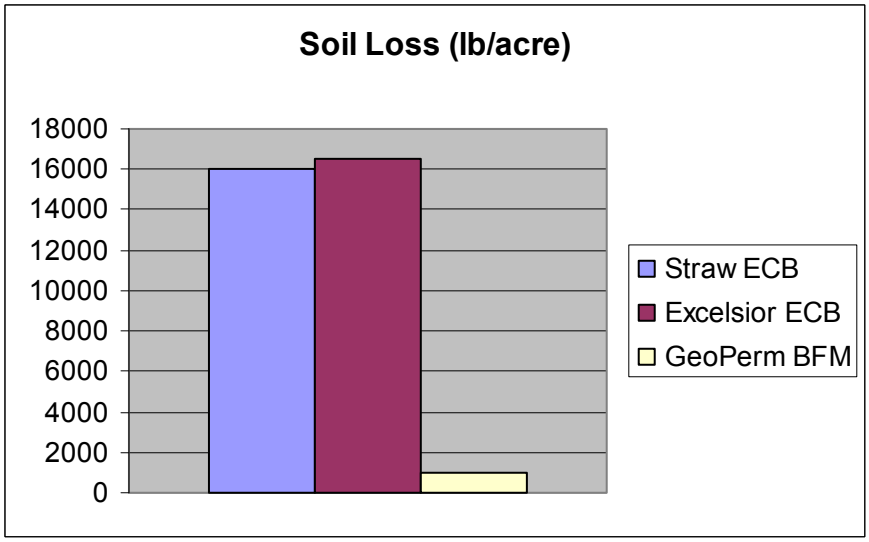

Figure 2: GeoPerm BFM vs. ECBs - Soil Loss*

* Data based on independent testing at the Utah Water Research Laboratory at 5 inches of rain per hour, a one hour rain event on a 2.5H:1V slope with sandy loam soil: BFM application rate of 3000 lb/acre; Soil loss data extrapolated from test plot areas on a per acre basis.

Worksheet 1 - PPB calculations

Project Name: Solar Array, Belfast Road (Route 3)

Lake Watershed: China Lake, East Basin

Town: China

Standard Calculations

Watershed per acre phosphorus budget (Appendix C)	**PAPB**	0.034	lbs P/acre/year
Total acreage of development parcel:	**TA**	10.56	acres
NWI wetland acreage:	**WA**	0.0034	acres
Steep slope acreage:	**SA**	0	acres
Project acreage: A = TA - (WA+ SA)	**A**	10.56	acres
Project Phosphorus Budget: PPB = P x A	**PPB**	0.36	**lbs P/year**

Small Watershed Adjustment

If Project Acreage (A) is greater than the threshold acreage for the small watershed threshold (SWT, from pertinent lake and town info in the table in Appendix C), calculate an alternative PPB using the analysis below and use this value if it is less than the the Standard Calculation PPB.

Small Watershed Threshold (Appendix C):	**SWT**		acres
Project acreage:	**A**		acres
Allowable increase in town's share of annual phosphorus load to lake (Appendix C):	**FC**		lbs P/year
Area available for development (Appendix C):	**AAD**		acres
Ratio of A to AAD (R=A/AAD)	**R**		

Project Phosphorus Budget

If R < 0.5, PPB = [(FC x R)/2] + [FC/4]	**PPB**		**lbs P/year**
If R> 0.5, PPB = FC x R	**PPB**		**lbs P/year**

1-15-09

Worksheet 2
Pre-PPE and Post-PPE Calculations

Calculate phosphorus export from development for before and after treatment
Use as many sheets as needed for each development type (commercial, roads, residential lots, etc.)

Project name: Solar Array, Belfast Road (Route 3) **Development type**: Solar Array Sheet # _____

Land Surface Type or Lot #(s) with description	Acres or # of lots	Export Coefficient from Table 3.1 Table 3.2	Pre-treatment Algal Av. P Export (lbs P/year)	Treatment Factor for BMP(s) from Chapter 6	Post-treatment Algal Av. P Export (lbs P/year)	Description of BMPs
Riprap/Crushed Rock	0.09	0.6	0.05	0.1	0.01	INFILTRATION
Concrete Pads	0.03	0.5	0.02	0.1	0.00	INFILTRATION
Ground Screws	0.001	0.5	0.00	0.3	0.00	MEADOW BUFFER
Solar Panels	1.43	0.0	0.00	1	0.00	
		Total Pre-PPE (lbs P/year)	0.07	**Total PostPPE (lbs P/year)**	0.01	

WORKSHEET 4 - PROJECT PHOSPHORUS EXPORT SUMMARY

Summarizing the project's algal available phosphorus export (PPE)

Project Name: Solar Array, Belfast Road (Route 3)

Project Phosphorus Budget - Worksheet 1	**PPB**	0.36	lbs P/year
Total Pre-Treatment Phosphorus Export - Worksheet 2	**Pre-PPE**	0.07	lbs P/year
Total Post-Treatment Phosphorus Export - Worksheet 2	**Post-PPE**	0.01	lbs P/year
Total Phosphorus Mitigation Credit - Worksheet 3	**TMC**		lbs P/year
Project Phosphorus Export (Post-PPE - TMC)	**PPE**	0.01	lbs P/year

Is the Project Phosphorus Export ≤ the Project Phosphorus Budget? (PPE≤PPB)

*If **YES**, PPE is less than or equal to PPB and the project meets its phosphorus budget .* *If **NO,** PPE is greater than PPB, more reduction in phosphorus export is required or the payment of a compensation fee may be an option*	YES
The amount of phosphorus that needs further treatment or compensation	lbs P/year

Has Project Phosphorus Export been sufficiently reduced?
Is (Pre-PPE - Post-PPE)/Pre-PPE greater than 0.60?

*If **YES**, in some watersheds the compensation fee is an available option.* *If **NO**, more treatment must be provided. PPE must be further reduced.*	
*The post-treatment phosphorus export must be less than 40% of the pre-treatment export (Post-PPE < 0.4*Pre-PPE)*	%

If the project is located in a watershed that is eligible for a compensation fee (or is a residential subdivision with buffers), a compensation fee may be appropriate as follows:

If Project Export has been reduced by greater than 60% and less than 75%, $25,000 per pound minus $833 per 1% Percent Export	
If Project Export has been reduced by greater than 75%, $12,500 per pound minus $500 per 1% Project Export	

POI#1

CHINA LAKE WATERSHED (POI#2)

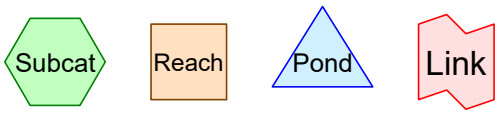

Routing Diagram for 4028-PRE
Prepared by Sitelines PA, Printed 3/5/2020
HydroCAD® 10.00-20 s/n 01100 © 2017 HydroCAD Software Solutions LLC

Summary for Subcatchment 1S: POI#1

Runoff = 8.99 cfs @ 12.28 hrs, Volume= 1.044 af, Depth= 0.98"

Runoff by SCS TR-20 method, UH=SCS, Weighted-Q, Time Span= 0.00-48.00 hrs, dt= 0.10 hrs
Type III 24-hr 2-year Rainfall=2.80"

Area (sf)	CN	Description
318,370	80	Pasture/grassland/range, Good, HSG D
203,203	74	Pasture/grassland/range, Good, HSG C
21,299	77	Woods, Good, HSG D
9,077	70	Woods, Good, HSG C
3,995	98	Paved parking, HSG C
555,944		Weighted Average
551,949		99.28% Pervious Area
3,995		0.72% Impervious Area

Tc (min)	Length (feet)	Slope (ft/ft)	Velocity (ft/sec)	Capacity (cfs)	Description
17.0	150	0.0100	0.15		**Sheet Flow, A-B** Range n= 0.130 P2= 2.80"
2.8	350	0.0915	2.12		**Shallow Concentrated Flow, B-C** Short Grass Pasture Kv= 7.0 fps
1.7	100	0.0200	0.99		**Shallow Concentrated Flow, C-D** Short Grass Pasture Kv= 7.0 fps
21.5	600	Total			

Summary for Subcatchment 2S: CHINA LAKE WATERSHED (POI#2)

Runoff = 10.07 cfs @ 12.19 hrs, Volume= 1.018 af, Depth= 1.11"

Runoff by SCS TR-20 method, UH=SCS, Weighted-Q, Time Span= 0.00-48.00 hrs, dt= 0.10 hrs
Type III 24-hr 2-year Rainfall=2.80"

Area (sf)	CN	Description
6,247	98	Paved parking, HSG D
452,049	80	Pasture/grassland/range, Good, HSG D
19,400	77	Woods, Good, HSG D
477,696		Weighted Average
471,449		98.69% Pervious Area
6,247		1.31% Impervious Area

Tc (min)	Length (feet)	Slope (ft/ft)	Velocity (ft/sec)	Capacity (cfs)	Description
12.2	150	0.0233	0.21		**Sheet Flow, A-B** Range n= 0.130 P2= 2.80"
3.5	260	0.0308	1.23		**Shallow Concentrated Flow, B-C** Short Grass Pasture Kv= 7.0 fps
15.7	410	Total			

Summary for Subcatchment 1S: POI#1

Runoff = 19.30 cfs @ 12.26 hrs, Volume= 2.159 af, Depth= 2.03"

Runoff by SCS TR-20 method, UH=SCS, Weighted-Q, Time Span= 0.00-48.00 hrs, dt= 0.10 hrs
Type III 24-hr 10-year Rainfall=4.20"

Area (sf)	CN	Description
318,370	80	Pasture/grassland/range, Good, HSG D
203,203	74	Pasture/grassland/range, Good, HSG C
21,299	77	Woods, Good, HSG D
9,077	70	Woods, Good, HSG C
3,995	98	Paved parking, HSG C
555,944		Weighted Average
551,949		99.28% Pervious Area
3,995		0.72% Impervious Area

Tc (min)	Length (feet)	Slope (ft/ft)	Velocity (ft/sec)	Capacity (cfs)	Description
17.0	150	0.0100	0.15		**Sheet Flow, A-B** Range n= 0.130 P2= 2.80"
2.8	350	0.0915	2.12		**Shallow Concentrated Flow, B-C** Short Grass Pasture Kv= 7.0 fps
1.7	100	0.0200	0.99		**Shallow Concentrated Flow, C-D** Short Grass Pasture Kv= 7.0 fps
21.5	600	Total			

Summary for Subcatchment 2S: CHINA LAKE WATERSHED (POI#2)

Runoff = 20.49 cfs @ 12.18 hrs, Volume= 2.030 af, Depth= 2.22"

Runoff by SCS TR-20 method, UH=SCS, Weighted-Q, Time Span= 0.00-48.00 hrs, dt= 0.10 hrs
Type III 24-hr 10-year Rainfall=4.20"

Area (sf)	CN	Description
6,247	98	Paved parking, HSG D
452,049	80	Pasture/grassland/range, Good, HSG D
19,400	77	Woods, Good, HSG D
477,696		Weighted Average
471,449		98.69% Pervious Area
6,247		1.31% Impervious Area

Tc (min)	Length (feet)	Slope (ft/ft)	Velocity (ft/sec)	Capacity (cfs)	Description
12.2	150	0.0233	0.21		**Sheet Flow, A-B** Range n= 0.130 P2= 2.80"
3.5	260	0.0308	1.23		**Shallow Concentrated Flow, B-C** Short Grass Pasture Kv= 7.0 fps
15.7	410	Total			

Summary for Subcatchment 1S: POI#1

Runoff = 27.32 cfs @ 12.25 hrs, Volume= 3.040 af, Depth= 2.86"

Runoff by SCS TR-20 method, UH=SCS, Weighted-Q, Time Span= 0.00-48.00 hrs, dt= 0.10 hrs
Type III 24-hr 25-year Rainfall=5.20"

Area (sf)	CN	Description
318,370	80	Pasture/grassland/range, Good, HSG D
203,203	74	Pasture/grassland/range, Good, HSG C
21,299	77	Woods, Good, HSG D
9,077	70	Woods, Good, HSG C
3,995	98	Paved parking, HSG C
555,944		Weighted Average
551,949		99.28% Pervious Area
3,995		0.72% Impervious Area

Tc (min)	Length (feet)	Slope (ft/ft)	Velocity (ft/sec)	Capacity (cfs)	Description
17.0	150	0.0100	0.15		**Sheet Flow, A-B** Range n= 0.130 P2= 2.80"
2.8	350	0.0915	2.12		**Shallow Concentrated Flow, B-C** Short Grass Pasture Kv= 7.0 fps
1.7	100	0.0200	0.99		**Shallow Concentrated Flow, C-D** Short Grass Pasture Kv= 7.0 fps
21.5	600	Total			

Summary for Subcatchment 2S: CHINA LAKE WATERSHED (POI#2)

Runoff = 28.42 cfs @ 12.18 hrs, Volume= 2.816 af, Depth= 3.08"

Runoff by SCS TR-20 method, UH=SCS, Weighted-Q, Time Span= 0.00-48.00 hrs, dt= 0.10 hrs
Type III 24-hr 25-year Rainfall=5.20"

Area (sf)	CN	Description
6,247	98	Paved parking, HSG D
452,049	80	Pasture/grassland/range, Good, HSG D
19,400	77	Woods, Good, HSG D
477,696		Weighted Average
471,449		98.69% Pervious Area
6,247		1.31% Impervious Area

Tc (min)	Length (feet)	Slope (ft/ft)	Velocity (ft/sec)	Capacity (cfs)	Description
12.2	150	0.0233	0.21		**Sheet Flow, A-B** Range n= 0.130 P2= 2.80"
3.5	260	0.0308	1.23		**Shallow Concentrated Flow, B-C** Short Grass Pasture Kv= 7.0 fps
15.7	410	Total			

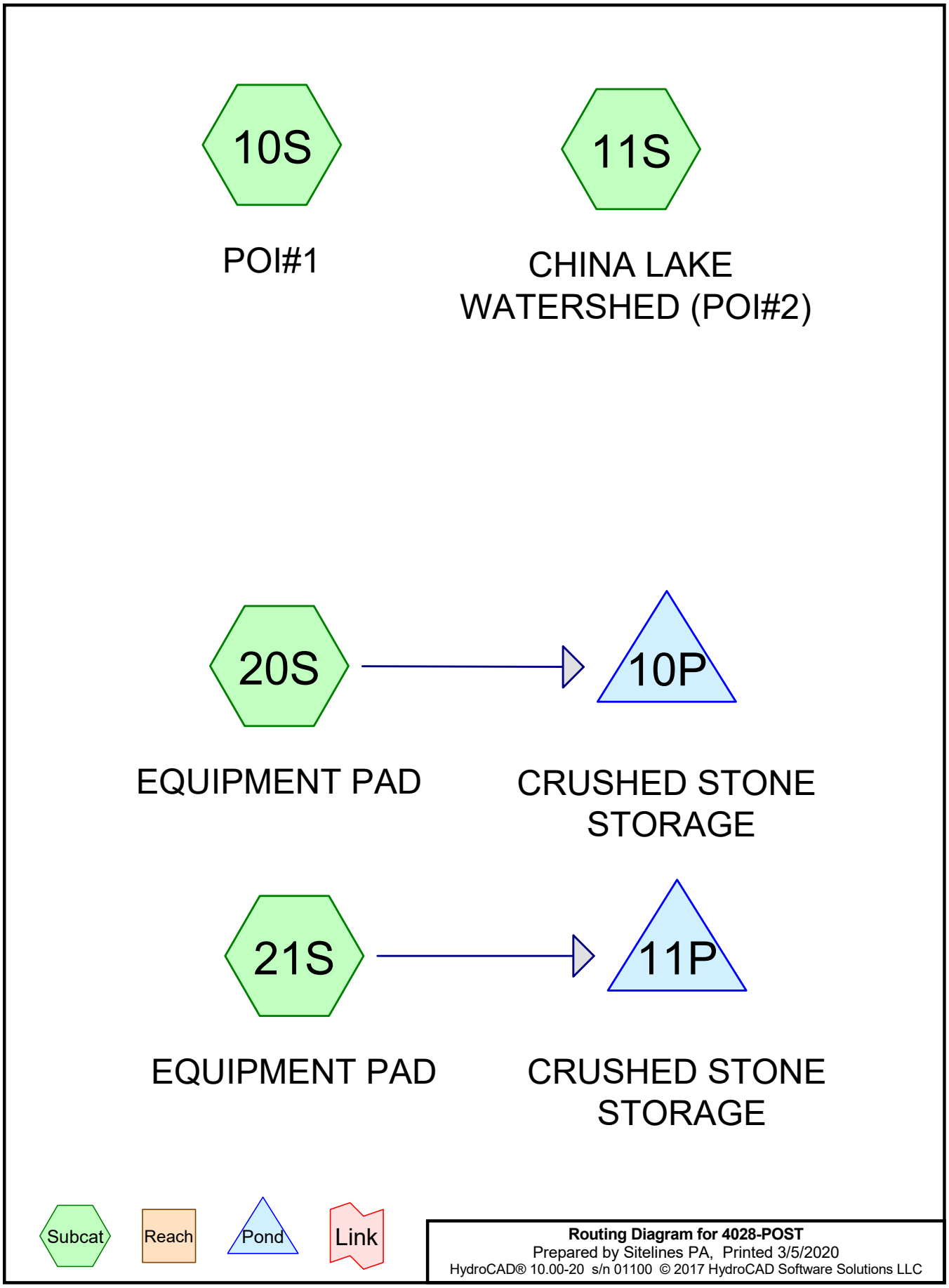

Routing Diagram for 4028-POST
Prepared by Sitelines PA, Printed 3/5/2020
HydroCAD® 10.00-20 s/n 01100 © 2017 HydroCAD Software Solutions LLC

Summary for Subcatchment 10S: POI#1

Runoff = 7.52 cfs @ 12.29 hrs, Volume= 0.900 af, Depth= 0.89"

Runoff by SCS TR-20 method, UH=SCS, Weighted-Q, Time Span= 0.00-48.00 hrs, dt= 0.10 hrs
Type III 24-hr 2-year Rainfall=2.80"

Area (sf)	CN	Description
14,264	98	Paved parking, HSG A
288,384	78	Meadow, non-grazed, HSG D
206,230	71	Meadow, non-grazed, HSG C
12,338	77	Woods, Good, HSG D
6,050	70	Woods, Good, HSG C
527,266		Weighted Average
513,002		97.29% Pervious Area
14,264		2.71% Impervious Area

Tc (min)	Length (feet)	Slope (ft/ft)	Velocity (ft/sec)	Capacity (cfs)	Description
17.0	150	0.0100	0.15		**Sheet Flow, A-B** Range n= 0.130 P2= 2.80"
2.8	350	0.0914	2.12		**Shallow Concentrated Flow, B-C** Short Grass Pasture Kv= 7.0 fps
1.7	100	0.0200	0.99		**Shallow Concentrated Flow, C-D** Short Grass Pasture Kv= 7.0 fps
21.5	600	Total			

Summary for Subcatchment 11S: CHINA LAKE WATERSHED (POI#2)

Runoff = 9.40 cfs @ 12.20 hrs, Volume= 0.965 af, Depth= 1.01"

Runoff by SCS TR-20 method, UH=SCS, Weighted-Q, Time Span= 0.00-48.00 hrs, dt= 0.10 hrs
Type III 24-hr 2-year Rainfall=2.80"

Area (sf)	CN	Description
6,482	98	Paved parking, HSG D
479,546	78	Meadow, non-grazed, HSG D
14,507	77	Woods, Good, HSG D
500,535		Weighted Average
494,053		98.70% Pervious Area
6,482		1.30% Impervious Area

Tc (min)	Length (feet)	Slope (ft/ft)	Velocity (ft/sec)	Capacity (cfs)	Description
12.2	150	0.0233	0.21		**Sheet Flow, A-B** Range n= 0.130 P2= 2.80"
3.5	260	0.0308	1.23		**Shallow Concentrated Flow, B-C** Short Grass Pasture Kv= 7.0 fps
15.7	410	Total			

Summary for Subcatchment 20S: EQUIPMENT PAD

Runoff = 0.04 cfs @ 12.02 hrs, Volume= 0.004 af, Depth= 2.57"

Runoff by SCS TR-20 method, UH=SCS, Weighted-Q, Time Span= 0.00-48.00 hrs, dt= 0.10 hrs
Type III 24-hr 2-year Rainfall=2.80"

	Area (sf)	CN	Description
*	723	98	
	723		100.00% Impervious Area

Tc (min)	Length (feet)	Slope (ft/ft)	Velocity (ft/sec)	Capacity (cfs)	Description
5.0					**Direct Entry,**

Summary for Subcatchment 21S: EQUIPMENT PAD

Runoff = 0.30 cfs @ 12.02 hrs, Volume= 0.025 af, Depth= 2.57"

Runoff by SCS TR-20 method, UH=SCS, Weighted-Q, Time Span= 0.00-48.00 hrs, dt= 0.10 hrs
Type III 24-hr 2-year Rainfall=2.80"

	Area (sf)	CN	Description
*	5,131	98	
	5,131		100.00% Impervious Area

Tc (min)	Length (feet)	Slope (ft/ft)	Velocity (ft/sec)	Capacity (cfs)	Description
5.0					**Direct Entry,**

Summary for Pond 10P: CRUSHED STONE STORAGE

Inflow Area = 0.017 ac,100.00% Impervious, Inflow Depth = 2.57" for 2-year event
Inflow = 0.04 cfs @ 12.02 hrs, Volume= 0.004 af
Outflow = 0.00 cfs @ 11.60 hrs, Volume= 0.004 af, Atten= 90%, Lag= 0.0 min
Discarded = 0.00 cfs @ 11.60 hrs, Volume= 0.004 af

Routing by Stor-Ind method, Time Span= 0.00-48.00 hrs, dt= 0.10 hrs
Peak Elev= 98.70' @ 12.84 hrs Surf.Area= 723 sf Storage= 58 cf

Plug-Flow detention time= 106.4 min calculated for 0.004 af (100% of inflow)
Center-of-Mass det. time= 105.9 min (861.3 - 755.4)

Volume	Invert	Avail.Storage	Storage Description
#1	98.50'	434 cf	**Custom Stage Data (Prismatic)** Listed below (Recalc) 1,085 cf Overall x 40.0% Voids
#2	100.00'	70 cf	**Custom Stage Data (Prismatic)** Listed below (Recalc) 174 cf Overall x 40.0% Voids
		503 cf	Total Available Storage

Elevation (feet)	Surf.Area (sq-ft)	Inc.Store (cubic-feet)	Cum.Store (cubic-feet)
98.50	723	0	0
100.00	723	1,085	1,085

Elevation (feet)	Surf.Area (sq-ft)	Inc.Store (cubic-feet)	Cum.Store (cubic-feet)
100.00	528	0	0
100.33	528	174	174

Device	Routing	Invert	Outlet Devices
#1	Discarded	98.50'	**0.250 in/hr Exfiltration over Surface area**

Discarded OutFlow Max=0.00 cfs @ 11.60 hrs HW=98.52' (Free Discharge)
└**1=Exfiltration** (Exfiltration Controls 0.00 cfs)

Summary for Pond 11P: CRUSHED STONE STORAGE

Inflow Area = 0.118 ac,100.00% Impervious, Inflow Depth = 2.57" for 2-year event
Inflow = 0.30 cfs @ 12.02 hrs, Volume= 0.025 af
Outflow = 0.03 cfs @ 11.60 hrs, Volume= 0.025 af, Atten= 90%, Lag= 0.0 min
Discarded = 0.03 cfs @ 11.60 hrs, Volume= 0.025 af

Routing by Stor-Ind method, Time Span= 0.00-48.00 hrs, dt= 0.10 hrs
Peak Elev= 98.70' @ 12.84 hrs Surf.Area= 5,131 sf Storage= 409 cf

Plug-Flow detention time= 106.4 min calculated for 0.025 af (100% of inflow)
Center-of-Mass det. time= 105.9 min (861.3 - 755.4)

Volume	Invert	Avail.Storage	Storage Description
#1	98.50'	3,079 cf	**Custom Stage Data (Prismatic)** Listed below (Recalc) 7,697 cf Overall x 40.0% Voids
#2	100.00'	520 cf	**Custom Stage Data (Prismatic)** Listed below (Recalc) 1,299 cf Overall x 40.0% Voids
		3,598 cf	Total Available Storage

Elevation (feet)	Surf.Area (sq-ft)	Inc.Store (cubic-feet)	Cum.Store (cubic-feet)
98.50	5,131	0	0
100.00	5,131	7,697	7,697

Elevation (feet)	Surf.Area (sq-ft)	Inc.Store (cubic-feet)	Cum.Store (cubic-feet)
100.00	3,936	0	0
100.33	3,936	1,299	1,299

Device	Routing	Invert	Outlet Devices
#1	Discarded	98.50'	**0.250 in/hr Exfiltration over Surface area**

Discarded OutFlow Max=0.03 cfs @ 11.60 hrs HW=98.52' (Free Discharge)
└**1=Exfiltration** (Exfiltration Controls 0.03 cfs)

Summary for Subcatchment 10S: POI#1

Runoff = 16.83 cfs @ 12.27 hrs, Volume= 1.906 af, Depth= 1.89"

Runoff by SCS TR-20 method, UH=SCS, Weighted-Q, Time Span= 0.00-48.00 hrs, dt= 0.10 hrs
Type III 24-hr 10-year Rainfall=4.20"

Area (sf)	CN	Description
14,264	98	Paved parking, HSG A
288,384	78	Meadow, non-grazed, HSG D
206,230	71	Meadow, non-grazed, HSG C
12,338	77	Woods, Good, HSG D
6,050	70	Woods, Good, HSG C
527,266		Weighted Average
513,002		97.29% Pervious Area
14,264		2.71% Impervious Area

Tc (min)	Length (feet)	Slope (ft/ft)	Velocity (ft/sec)	Capacity (cfs)	Description
17.0	150	0.0100	0.15		**Sheet Flow, A-B** Range n= 0.130 P2= 2.80"
2.8	350	0.0914	2.12		**Shallow Concentrated Flow, B-C** Short Grass Pasture Kv= 7.0 fps
1.7	100	0.0200	0.99		**Shallow Concentrated Flow, C-D** Short Grass Pasture Kv= 7.0 fps
21.5	600	Total			

Summary for Subcatchment 11S: CHINA LAKE WATERSHED (POI#2)

Runoff = 19.96 cfs @ 12.19 hrs, Volume= 1.982 af, Depth= 2.07"

Runoff by SCS TR-20 method, UH=SCS, Weighted-Q, Time Span= 0.00-48.00 hrs, dt= 0.10 hrs
Type III 24-hr 10-year Rainfall=4.20"

Area (sf)	CN	Description
6,482	98	Paved parking, HSG D
479,546	78	Meadow, non-grazed, HSG D
14,507	77	Woods, Good, HSG D
500,535		Weighted Average
494,053		98.70% Pervious Area
6,482		1.30% Impervious Area

Tc (min)	Length (feet)	Slope (ft/ft)	Velocity (ft/sec)	Capacity (cfs)	Description
12.2	150	0.0233	0.21		**Sheet Flow, A-B** Range n= 0.130 P2= 2.80"
3.5	260	0.0308	1.23		**Shallow Concentrated Flow, B-C** Short Grass Pasture Kv= 7.0 fps
15.7	410	Total			

Summary for Subcatchment 20S: EQUIPMENT PAD

Runoff = 0.06 cfs @ 12.02 hrs, Volume= 0.005 af, Depth= 3.96"

Runoff by SCS TR-20 method, UH=SCS, Weighted-Q, Time Span= 0.00-48.00 hrs, dt= 0.10 hrs
Type III 24-hr 10-year Rainfall=4.20"

	Area (sf)	CN	Description
*	723	98	
	723		100.00% Impervious Area

Tc (min)	Length (feet)	Slope (ft/ft)	Velocity (ft/sec)	Capacity (cfs)	Description
5.0					**Direct Entry,**

Summary for Subcatchment 21S: EQUIPMENT PAD

Runoff = 0.46 cfs @ 12.02 hrs, Volume= 0.039 af, Depth= 3.96"

Runoff by SCS TR-20 method, UH=SCS, Weighted-Q, Time Span= 0.00-48.00 hrs, dt= 0.10 hrs
Type III 24-hr 10-year Rainfall=4.20"

	Area (sf)	CN	Description
*	5,131	98	
	5,131		100.00% Impervious Area

Tc (min)	Length (feet)	Slope (ft/ft)	Velocity (ft/sec)	Capacity (cfs)	Description
5.0					**Direct Entry,**

Summary for Pond 10P: CRUSHED STONE STORAGE

Inflow Area = 0.017 ac,100.00% Impervious, Inflow Depth = 3.96" for 10-year event
Inflow = 0.06 cfs @ 12.02 hrs, Volume= 0.005 af
Outflow = 0.00 cfs @ 10.90 hrs, Volume= 0.005 af, Atten= 93%, Lag= 0.0 min
Discarded = 0.00 cfs @ 10.90 hrs, Volume= 0.005 af

Routing by Stor-Ind method, Time Span= 0.00-48.00 hrs, dt= 0.10 hrs
Peak Elev= 98.85' @ 13.58 hrs Surf.Area= 723 sf Storage= 102 cf

Plug-Flow detention time= 198.7 min calculated for 0.005 af (100% of inflow)
Center-of-Mass det. time= 198.2 min (945.3 - 747.1)

Volume	Invert	Avail.Storage	Storage Description
#1	98.50'	434 cf	**Custom Stage Data (Prismatic)** Listed below (Recalc) 1,085 cf Overall x 40.0% Voids
#2	100.00'	70 cf	**Custom Stage Data (Prismatic)** Listed below (Recalc) 174 cf Overall x 40.0% Voids
		503 cf	Total Available Storage

Elevation (feet)	Surf.Area (sq-ft)	Inc.Store (cubic-feet)	Cum.Store (cubic-feet)
98.50	723	0	0
100.00	723	1,085	1,085

Elevation (feet)	Surf.Area (sq-ft)	Inc.Store (cubic-feet)	Cum.Store (cubic-feet)
100.00	528	0	0
100.33	528	174	174

Device	Routing	Invert	Outlet Devices
#1	Discarded	98.50'	**0.250 in/hr Exfiltration over Surface area**

Discarded OutFlow Max=0.00 cfs @ 10.90 hrs HW=98.52' (Free Discharge)
└**1=Exfiltration** (Exfiltration Controls 0.00 cfs)

Summary for Pond 11P: CRUSHED STONE STORAGE

Inflow Area = 0.118 ac,100.00% Impervious, Inflow Depth = 3.96" for 10-year event
Inflow = 0.46 cfs @ 12.02 hrs, Volume= 0.039 af
Outflow = 0.03 cfs @ 10.90 hrs, Volume= 0.039 af, Atten= 93%, Lag= 0.0 min
Discarded = 0.03 cfs @ 10.90 hrs, Volume= 0.039 af

Routing by Stor-Ind method, Time Span= 0.00-48.00 hrs, dt= 0.10 hrs
Peak Elev= 98.85' @ 13.58 hrs Surf.Area= 5,131 sf Storage= 721 cf

Plug-Flow detention time= 198.7 min calculated for 0.039 af (100% of inflow)
Center-of-Mass det. time= 198.2 min (945.3 - 747.1)

Volume	Invert	Avail.Storage	Storage Description
#1	98.50'	3,079 cf	**Custom Stage Data (Prismatic)** Listed below (Recalc) 7,697 cf Overall x 40.0% Voids
#2	100.00'	520 cf	**Custom Stage Data (Prismatic)** Listed below (Recalc) 1,299 cf Overall x 40.0% Voids
		3,598 cf	Total Available Storage

Elevation (feet)	Surf.Area (sq-ft)	Inc.Store (cubic-feet)	Cum.Store (cubic-feet)
98.50	5,131	0	0
100.00	5,131	7,697	7,697

Elevation (feet)	Surf.Area (sq-ft)	Inc.Store (cubic-feet)	Cum.Store (cubic-feet)
100.00	3,936	0	0
100.33	3,936	1,299	1,299

Device	Routing	Invert	Outlet Devices
#1	Discarded	98.50'	**0.250 in/hr Exfiltration over Surface area**

Discarded OutFlow Max=0.03 cfs @ 10.90 hrs HW=98.52' (Free Discharge)
└**1=Exfiltration** (Exfiltration Controls 0.03 cfs)

Summary for Subcatchment 10S: POI#1

Runoff = 24.20 cfs @ 12.26 hrs, Volume= 2.712 af, Depth= 2.69"

Runoff by SCS TR-20 method, UH=SCS, Weighted-Q, Time Span= 0.00-48.00 hrs, dt= 0.10 hrs
Type III 24-hr 25-year Rainfall=5.20"

Area (sf)	CN	Description
14,264	98	Paved parking, HSG A
288,384	78	Meadow, non-grazed, HSG D
206,230	71	Meadow, non-grazed, HSG C
12,338	77	Woods, Good, HSG D
6,050	70	Woods, Good, HSG C
527,266		Weighted Average
513,002		97.29% Pervious Area
14,264		2.71% Impervious Area

Tc (min)	Length (feet)	Slope (ft/ft)	Velocity (ft/sec)	Capacity (cfs)	Description
17.0	150	0.0100	0.15		**Sheet Flow, A-B** Range n= 0.130 P2= 2.80"
2.8	350	0.0914	2.12		**Shallow Concentrated Flow, B-C** Short Grass Pasture Kv= 7.0 fps
1.7	100	0.0200	0.99		**Shallow Concentrated Flow, C-D** Short Grass Pasture Kv= 7.0 fps
21.5	600	Total			

Summary for Subcatchment 11S: CHINA LAKE WATERSHED (POI#2)

Runoff = 28.11 cfs @ 12.18 hrs, Volume= 2.783 af, Depth= 2.91"

Runoff by SCS TR-20 method, UH=SCS, Weighted-Q, Time Span= 0.00-48.00 hrs, dt= 0.10 hrs
Type III 24-hr 25-year Rainfall=5.20"

Area (sf)	CN	Description
6,482	98	Paved parking, HSG D
479,546	78	Meadow, non-grazed, HSG D
14,507	77	Woods, Good, HSG D
500,535		Weighted Average
494,053		98.70% Pervious Area
6,482		1.30% Impervious Area

Tc (min)	Length (feet)	Slope (ft/ft)	Velocity (ft/sec)	Capacity (cfs)	Description
12.2	150	0.0233	0.21		**Sheet Flow, A-B** Range n= 0.130 P2= 2.80"
3.5	260	0.0308	1.23		**Shallow Concentrated Flow, B-C** Short Grass Pasture Kv= 7.0 fps
15.7	410	Total			

Summary for Subcatchment 20S: EQUIPMENT PAD

Runoff = 0.08 cfs @ 12.02 hrs, Volume= 0.007 af, Depth= 4.96"

Runoff by SCS TR-20 method, UH=SCS, Weighted-Q, Time Span= 0.00-48.00 hrs, dt= 0.10 hrs
Type III 24-hr 25-year Rainfall=5.20"

	Area (sf)	CN	Description
*	723	98	
	723		100.00% Impervious Area

Tc (min)	Length (feet)	Slope (ft/ft)	Velocity (ft/sec)	Capacity (cfs)	Description
5.0					**Direct Entry,**

Summary for Subcatchment 21S: EQUIPMENT PAD

Runoff = 0.57 cfs @ 12.02 hrs, Volume= 0.049 af, Depth= 4.96"

Runoff by SCS TR-20 method, UH=SCS, Weighted-Q, Time Span= 0.00-48.00 hrs, dt= 0.10 hrs
Type III 24-hr 25-year Rainfall=5.20"

	Area (sf)	CN	Description
*	5,131	98	
	5,131		100.00% Impervious Area

Tc (min)	Length (feet)	Slope (ft/ft)	Velocity (ft/sec)	Capacity (cfs)	Description
5.0					**Direct Entry,**

Summary for Pond 10P: CRUSHED STONE STORAGE

Inflow Area = 0.017 ac,100.00% Impervious, Inflow Depth = 4.96" for 25-year event
Inflow = 0.08 cfs @ 12.02 hrs, Volume= 0.007 af
Outflow = 0.00 cfs @ 10.40 hrs, Volume= 0.007 af, Atten= 95%, Lag= 0.0 min
Discarded = 0.00 cfs @ 10.40 hrs, Volume= 0.007 af

Routing by Stor-Ind method, Time Span= 0.00-48.00 hrs, dt= 0.10 hrs
Peak Elev= 98.98' @ 14.11 hrs Surf.Area= 723 sf Storage= 138 cf

Plug-Flow detention time= 277.5 min calculated for 0.007 af (100% of inflow)
Center-of-Mass det. time= 277.0 min (1,020.4 - 743.4)

Volume	Invert	Avail.Storage	Storage Description
#1	98.50'	434 cf	**Custom Stage Data (Prismatic)** Listed below (Recalc) 1,085 cf Overall x 40.0% Voids
#2	100.00'	70 cf	**Custom Stage Data (Prismatic)** Listed below (Recalc) 174 cf Overall x 40.0% Voids
		503 cf	Total Available Storage

Elevation (feet)	Surf.Area (sq-ft)	Inc.Store (cubic-feet)	Cum.Store (cubic-feet)
98.50	723	0	0
100.00	723	1,085	1,085

Elevation (feet)	Surf.Area (sq-ft)	Inc.Store (cubic-feet)	Cum.Store (cubic-feet)
100.00	528	0	0
100.33	528	174	174

Device	Routing	Invert	Outlet Devices
#1	Discarded	98.50'	**0.250 in/hr Exfiltration over Surface area**

Discarded OutFlow Max=0.00 cfs @ 10.40 hrs HW=98.52' (Free Discharge)
└**1=Exfiltration** (Exfiltration Controls 0.00 cfs)

Summary for Pond 11P: CRUSHED STONE STORAGE

Inflow Area = 0.118 ac,100.00% Impervious, Inflow Depth = 4.96" for 25-year event
Inflow = 0.57 cfs @ 12.02 hrs, Volume= 0.049 af
Outflow = 0.03 cfs @ 10.40 hrs, Volume= 0.049 af, Atten= 95%, Lag= 0.0 min
Discarded = 0.03 cfs @ 10.40 hrs, Volume= 0.049 af

Routing by Stor-Ind method, Time Span= 0.00-48.00 hrs, dt= 0.10 hrs
Peak Elev= 98.98' @ 14.11 hrs Surf.Area= 5,131 sf Storage= 979 cf

Plug-Flow detention time= 277.5 min calculated for 0.049 af (100% of inflow)
Center-of-Mass det. time= 277.0 min (1,020.4 - 743.4)

Volume	Invert	Avail.Storage	Storage Description
#1	98.50'	3,079 cf	**Custom Stage Data (Prismatic)** Listed below (Recalc) 7,697 cf Overall x 40.0% Voids
#2	100.00'	520 cf	**Custom Stage Data (Prismatic)** Listed below (Recalc) 1,299 cf Overall x 40.0% Voids
		3,598 cf	Total Available Storage

Elevation (feet)	Surf.Area (sq-ft)	Inc.Store (cubic-feet)	Cum.Store (cubic-feet)
98.50	5,131	0	0
100.00	5,131	7,697	7,697

Elevation (feet)	Surf.Area (sq-ft)	Inc.Store (cubic-feet)	Cum.Store (cubic-feet)
100.00	3,936	0	0
100.33	3,936	1,299	1,299

Device	Routing	Invert	Outlet Devices
#1	Discarded	98.50'	**0.250 in/hr Exfiltration over Surface area**

Discarded OutFlow Max=0.03 cfs @ 10.40 hrs HW=98.52' (Free Discharge)
└**1=Exfiltration** (Exfiltration Controls 0.03 cfs)

SOLAR ARRAY

BELFAST RD (ROUTE 3), CHINA, MAINE

PREPARED FOR:

SUNRAISE DEVELOPMENT, LLC
26 MARKET SQUARE, PORTSMOUTH, NH 03801

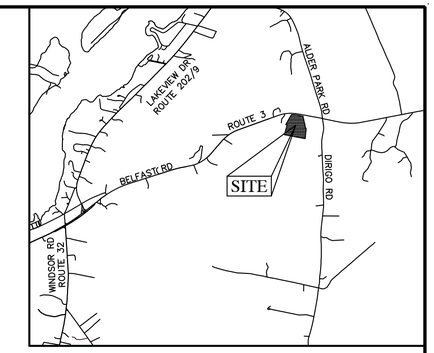

LOCATION MAP
NOT TO SCALE

GENERAL NOTES:

1. DRAWINGS ARE BASED ON BOUNDARY INFORMATION BY SITELINES, PA.

2. THE CONTRACTOR IS SPECIFICALLY CAUTIONED THAT THE LOCATION AND/OR THE ELEVATION OF THE EXISTING UTILITIES AS SHOWN ON THESE PLANS IS BASED ON RECORDS OF THE VARIOUS UTILITY COMPANIES AND WHERE POSSIBLE, MEASUREMENTS TAKEN IN THE FIELD. THIS INFORMATION HAS NOT BEEN INDEPENDENTLY VERIFIED BY THE OWNER OR ITS REPRESENTATIVES AND IS NOT TO BE RELIED ON AS BEING EXACT OR COMPLETE. THE CONTRACTOR SHALL CALL THE APPROPRIATE UTILITY COMPANY AND DIG SAFE (1-800-DIG-SAFE) AT LEAST 72 HOURS PRIOR TO ANY EXCAVATION TO REQUEST EXACT FIELD LOCATION OF UTILITIES. IN AREAS OF POTENTIAL CONFLICTS TEST PITS SHALL BE REQUIRED TO VERIFY EXISTING UTILITY LOCATION. IT SHALL BE THE RESPONSIBILITY OF THE CONTRACTOR TO RELOCATE ALL EXISTING UTILITIES WHICH CONFLICT WITH THE PROPOSED IMPROVEMENTS SHOWN ON THE PLANS.

3. THE LOCATION, SIZE, DEPTH, AND SPECIFICATIONS FOR CONSTRUCTION OF PROPOSED PRIVATE UTILITY SERVICES SHALL BE INSTALLED ACCORDING TO THE REQUIREMENTS PROVIDED BY, AND APPROVED BY THE RESPECTIVE UTILITY COMPANY (GAS, TELEPHONE, ELECTRIC, CABLE AND FIRE ALARM). FINAL DESIGN LOADS AND LOCATIONS TO BE COORDINATED WITH CONSTRUCTION MANAGER AND ARCHITECT.

4. THE CONTRACTOR SHALL FIELD VERIFY THE LOCATION, SIZE, INVERTS AND TYPES OF EXISTING PIPES AT ALL PROPOSED POINTS OF CONNECTION PRIOR TO ORDERING MATERIALS. WHERE AN EXISTING UTILITY IS FOUND TO CONFLICT WITH THE PROPOSED WORK, THE LOCATIONS, ELEVATION, AND SIZE OF THE UTILITY SHALL BE ACCURATELY DETERMINED WITHOUT DELAY BY THE CONTRACTOR, AND THE INFORMATION FURNISHED IN WRITING TO THE CONSTRUCTION MANAGER REPRESENTATIVE FOR THE RESOLUTION OF THE CONFLICT.

5. THE CONTRACTOR SHALL VERIFY ALL CRITICAL DIMENSIONS AND GRADES BEFORE WORK BEGINS. CONTRACTOR SHALL CONFIRM LOCATION AND DEPTH ALL UTILITY LINE CROSSINGS WITH TEST PITS PRIOR TO BEGINNING WORK. CONFLICTS SHALL BE REPORTED IN WRITING TO CONSTRUCTION MANAGER FOR RESOLUTION OF THE CONFLICT.

6. ALL AREAS OUTSIDE THE LIMIT OF WORK THAT ARE DISTURBED SHALL BE RESTORED BY THE CONTRACTOR TO THEIR ORIGINAL CONDITION AT THE CONTRACTOR'S EXPENSE. ALL AREAS DISTURBED DURING CONSTRUCTION NOT COVERED WITH BUILDINGS, STRUCTURES, OR PAVEMENT SHALL RECEIVE 4 INCHES OF LOAM AND SEED.

7. THE CONTRACTOR SHALL MAKE ALL ARRANGEMENTS AND SHALL BE RESPONSIBLE FOR PAYING ANY FEES FOR ANY POLE RELOCATION AND FOR THE ALTERATION OR ADJUSTMENT OF GAS, ELECTRIC, TELEPHONE, CABLE, FIRE ALARM AND ANY OTHER PRIVATE UTILITIES BY THE UTILITY COMPANIES.

8. UPON AWARD OF CONTRACT, CONTRACTOR SHALL MAKE ALL NECESSARY CONSTRUCTION NOTIFICATIONS AND APPLY FOR AND OBTAIN ALL NECESSARY PERMITS, PAY ALL FEES AND POST ALL BONDS ASSOCIATED WITH THE WORK INDICATED ON THE DRAWINGS AND AS SPECIFIED.

9. ALL PROPERTY MONUMENTATION DISTURBED DURING CONSTRUCTION SHALL BE RESET TO THEIR ORIGINAL LOCATION BY A MAINE REGISTERED LICENSED PROFESSIONAL LAND SURVEYOR (PLS) AT THE CONTRACTOR'S EXPENSE. THE CONTRACTOR SHALL PREPARE AN AS-BUILT PLAN SURVEY SHOWING LOCATIONS OF ALL SURFACE FEATURES AND SUBSURFACE UTILITY SYSTEMS INCLUDING THE LOCATION TYPE, SIZE AND INVERTS.

10. THE CONTRACTOR SHALL INSTALL ALL EROSION CONTROL MEASURES PRIOR TO EARTHWORK OPERATION AND MAINTAIN ALL EROSION CONTROL MEASURES AND SEEDED EMBANKMENTS DURING CONSTRUCTION. EROSION CONTROL SHALL BE REMOVED ONLY UPON THE ESTABLISHMENT OF ALL LANDSCAPED AREAS. ALL WORK SHALL BE IN COMPLIANCE WITH THE ENVIRONMENTAL QUALITY HANDBOOK FOR EROSION AND SEDIMENT CONTROL, LATEST EDITION, AS ADOPTED BY THE MAINE DEPARTMENT OF ENVIRONMENTAL PROTECTION.

11. THE CONTRACTOR SHALL BE SOLELY RESPONSIBLE FOR SITE SECURITY AND JOB SAFETY. ALL CONSTRUCTION ACTIVITY SHALL BE IN ACCORDANCE WITH OSHA STANDARDS AND LOCAL REQUIREMENTS.

12. ALL MATERIALS AND CONSTRUCTION METHODS USED WITHIN THE PUBLIC RIGHT-OF-WAY SHALL CONFORM TO ALL LOCAL MUNICIPAL STANDARDS AND MAINE DEPARTMENT OF TRANSPORTATION SPECIFICATIONS.

13. THE CONTRACTOR IS REQUIRED TO CONTROL DUST DURING CONSTRUCTION. EXPOSED SOIL AREAS SHALL BE SPRAYED WITH WATER AS NEEDED TO CONTROL DUST EMISSIONS. COVER EXPOSED SOIL AREAS AS QUICKLY AS PRACTICAL TO PREVENT WINDS FROM GENERATING DUST.

14. THE CONTRACTOR SHALL ANTICIPATE THAT GROUNDWATER WILL BE ENCOUNTERED DURING CONSTRUCTION AND SHALL INCLUDE SUFFICIENT COSTS WITHIN THEIR BID TO PROVIDE DEWATERING AS NECESSARY. NO SEPARATE PAYMENT SHALL BE MADE TO THE CONTRACTOR FOR DEWATERING.

15. ALL MATERIALS SHALL BE NEW AND PROVIDED BY THE CONTRACTOR.

GRADING AND DRAINAGE NOTES:

1. TOPSOIL STRIPPED IN AREAS OF CONSTRUCTION THAT IS SUITABLE FOR REUSE AS LOAM SHALL BE STOCKPILED ON SITE AT A LOCATION TO BE DESIGNATED BY OWNER. UNSUITABLE SOIL SHALL BE SEPARATED, REMOVED AND DISPOSED OF AT AN APPROVED DISPOSAL LOCATION OFF SITE.

2. THE CONTRACTOR SHALL ANTICIPATE THAT GROUNDWATER WILL BE ENCOUNTERED DURING CONSTRUCTION AND SHALL INCLUDE SUFFICIENT COSTS WITHIN THEIR BID TO PROVIDE DEWATERING AS NECESSARY. NO SEPARATE PAYMENT SHALL BE MADE TO THE CONTRACTOR FOR DEWATERING.

LEGEND

EXISTING		PROPOSED
●	IRON MARKER FOUND	
	GRANITE MONUMENT SET	⊡
□	CATCH BASIN	
Ⓢ	SEWER MANHOLE	Ⓢ
HYD	FIRE HYDRANT	
	WATER GATE VALVE	
	WATER SHUT-OFF	
○	BLOW-OFF/CLEAN-OUT	○
CMP #13	UTILITY POLE	●
OHE (OVERHEAD UTILITY LINE)	UTILITY LINE	OHE (OVERHEAD UTILITY LINE)
	PROPERTY LINE	
	EASEMENTS	
	SETBACK/BUFFER	
WmB Au	SOILS BOUNDARY	
	WETLAND BOUNDARY	
	STREAM	
	CURB	
	EDGE OF PAVEMENT	
	BUILDING	
	SLOPE ARROW	-1.5%
100	CONTOURS	100
	TREE LINE	
	SEDIMENT BARRIER	SB
	RIPRAP	
	PROPOSED GRAVEL	

UTILITY CONTACTS

CODE ENFORCEMENT
WILLIAM BUTLER
571 LAKEVIEW DRIVE
CHINA, MAINE 04358
207-445-3540

PUBLIC WORKS DEPARTMENT
SHAWN REED
211 ALDER PARK ROAD
CHINA, MAINE 04358
207-445-2014

ELECTRIC SERVICE
CENTRAL MAINE POWER
280 BATH ROAD
BRUNSWICK, MAINE 04011
207-721-8054

CHINA FIRE DEPARTMENT
CHIEF RICHARD E. MORSE, FIRE CHIEF
SOUTH CHINA FIRE DEPARTMENT
PO BOX 325
CHINA, MAINE 04358

PROJECT TEAM

CIVIL ENGINEER/SURVEYOR
SITELINES P.A.
ATTN: JOSEPH J. MARDEN, P.E.
119 PURINTON ROAD, SUITE A
BRUNSWICK, MAINE 04011
207-725-1200
WWW.SITELINESPA.COM

WETLANDS:
ATLANTIC ENVIRONMENTAL LLC
TIM FORRESTER
135 RIVER ROAD
WOOLWICH, MAINE 04579
207-837-2199

PERMITTING REQUIREMENTS:

AGENCY:	*PERMIT:*	*STATUS:*
TOWN OF CHINA	SITE PLAN APPROVAL	SUBMITTED 01/28/20
MAINE DEPARTMENT OF ENVIRONMENTAL PROTECTION	STORMWATER PERMIT-BY-RULE	PENDING
MAINE DEPARTMENT OF TRANSPORTATION	DRIVEWAY/ENTRANCE PERMIT	PENDING

SHEET INDEX

SHEET #	SHEET TITLE:	SCALE:
C1	COVER SHEET	NTS
C2	EXISTING CONDITIONS PLAN	1"=60'
C3	SITE LAYOUT & UTILITY PLAN	1"=60'
C4	GRADING, DRAINAGE, & EROSION CONTROL PLAN	1"=60'
C5	SITE DETAILS	NTS
C6	EROSION CONTROL DETAILS AND NOTES	NTS

CALL DIG SAFE UTILITY LOCATION
1-888-344-7233
STATE LAW REQUIRES ADVANCE NOTICE OF AT LEAST 3 BUSINESS DAYS BEFORE YOU DIG, GRADE OR EXCAVATE FOR THE MARKING OF UNDERGROUND UTILITIES

PROGRESS PRINT
THIS PLAN IS ISSUED FOR REVIEW AND INFORMATION PURPOSES ONLY. THIS PLAN IS SUBJECT TO CHANGE AND IS NOT FOR PRICING OR CONSTRUCTION. PRICING BASED ON THIS PLAN IS NOT BINDING UNLESS SIGNED BY BOTH CONTRACTOR AND OWNER.

STATE OF MAINE
JOSEPH J. MARDEN
12828
LICENSED
PROFESSIONAL ENGINEER
03-09-20

2. 03-09-20	REVISED SOLAR ARRAY LAYOUT	JJM
1. 01-27-20	SUBMISSION TO TOWN FOR PRELIMINARY REVIEW	JJM

TITLE: COVER SHEET

PROJECT: SOLAR ARRAY
BELFAST RD (ROUTE 3), CHINA, ME 04358

OWNER: SUNRAISE DEVELOPMENT, LLC
26 MARKET SQUARE, PORTSMOUTH, NH 03801

SITELINES
119 PURINTON ROAD, SUITE A
BRUNSWICK, MAINE 04011
207.725.1200
CIVIL ENGINEERS ▪ PLANNERS ▪ LAND SURVEYORS

FIELD WK: OTHERS	SCALE: NTS	SHEET: C1
DRN BY: JJM	JOB #: 4028	
CH'D BY: CYN	MAP/LOT: 33/16	
DATE: 01-03-2020	FILE:4028-COVER-DET	

©2020. THIS DRAWING IS THE PROPERTY AND INSTRUMENT OF SITELINES PA. NO MODIFICATIONS OR CHANGES MAY BE MADE TO THIS DRAWING WITHOUT THE EXPRESS WRITTEN PERMISSION OF SITELINES PA. ANY MODIFICATION, CHANGE OR USE OF THIS DRAWING WITHOUT THE EXPRESS WRITTEN PERMISSION OF SITELINES PA IS WRONGFUL AND IS AT THE USER'S RISK.

X:\LAND PROJECTS\4028 RT 3 SOLAR CHINA\DWG\4028-COVER-DET.DWG, C1 COVER, 11/15/2019 3:29:33 PM, JOSEPH MARDEN

© 2020, THIS DRAWING IS THE PROPERTY AND INSTRUMENT OF SITELINES PA, NO MODIFICATIONS OR CHANGES MAY BE MADE TO THIS DRAWING WITHOUT THE EXPRESS WRITTEN PERMISSION OF SITELINES PA, ANY MODIFICATION, CHANGE OR USE OF THIS DRAWING WITHOUT THE EXPRESS WRITTEN PERMISSION OF SITELINES PA IS WRONGFUL AND IS AT THE USER'S RISK.

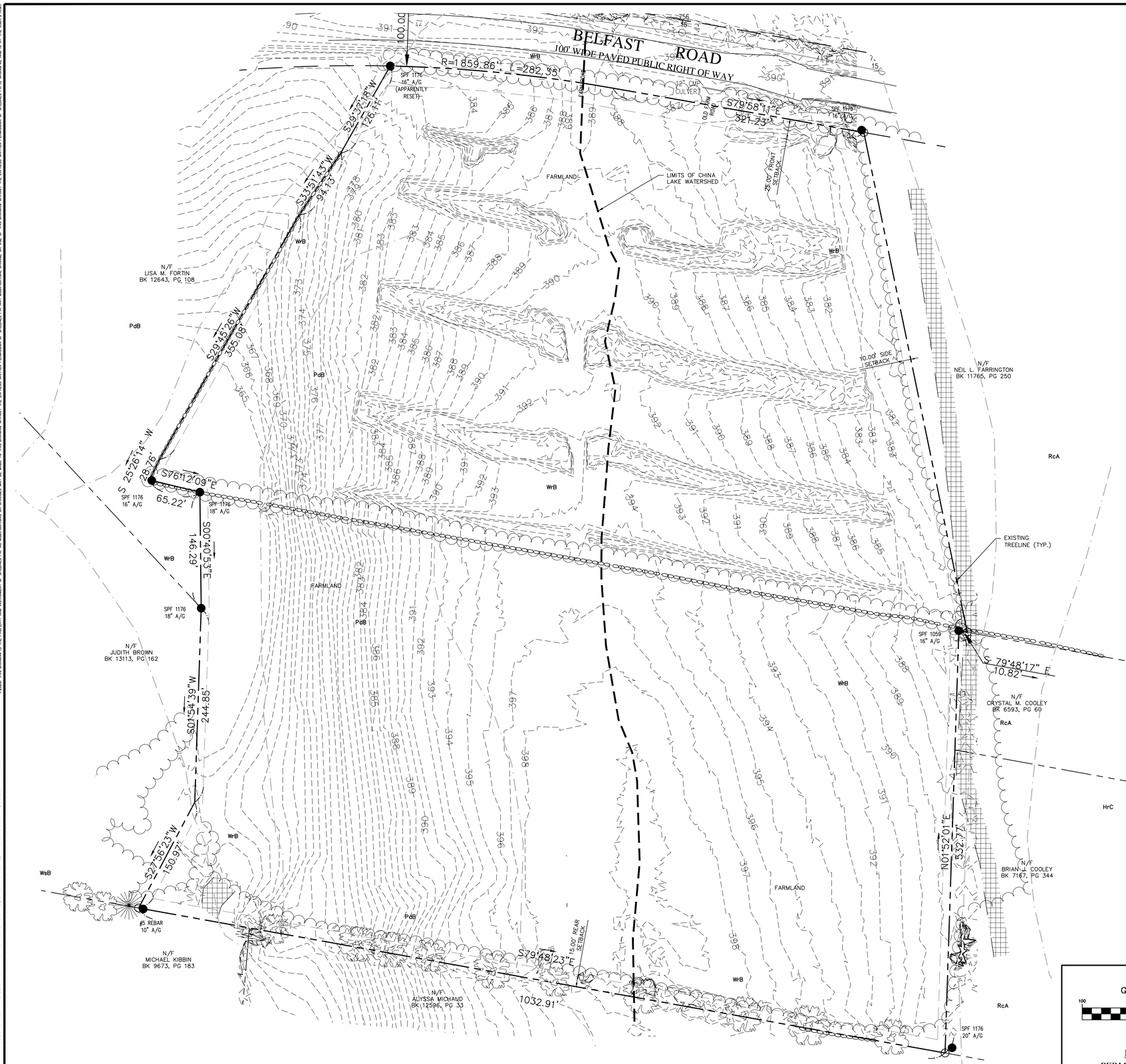

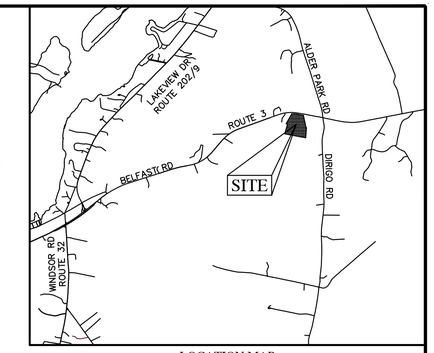

LOCATION MAP
NOT TO SCALE

NOTES:

1. TITLE REFERENCE FOR SURVEYED PARCEL:

   BK 8182, PG 80

2. PLAN REFERENCE(S):

   a) PLAN ENTITLED, "MAINE STATE HIGHWAY COMMISSION – RIGHT OF WAY MAP – STATE HIGHWAY 215", DATED JUNE 1962, SHEETS 4 & 5, RECORDED IN PB 29, PGs 34 & 35.

   b) PLAN ENTITLED, "PLAN OF STANDARD BOUNDARY SURVEY – HAZEL PELLERIN", DATED JUNE 1986, BY THAYER ENGINEERING CO., ON FILE WITH THE PREPARER.

3. AREA INFORMATION:

   1,004,323 SQ.FT. 23.06 ACRES

4. TAX MAP REFERENCE:

   TAX MAP 33, LOT 16.

5. BASIS OF BEARINGS:

   BEARINGS ARE GRID.

6. ROAD INFORMATION:

   BELFAST ROAD WIDTH IS 100' PER PLAN REFERENCED IN NOTE 2 ABOVE. LOCATION IS BASED ON EXISTING TRAVELED WAY LOCATED.

7. UTILITY INFORMATION:

   THERE MAY BE UNDERGROUND CONDUIT, WIRES, CABLES AND/OR STRUCTURES NOT SHOWN ON THIS PLAN. THE LOCATIONS SHOWN ARE BASED ON SURFACE FEATURES VISIBLE AT THE TIME OF SURVEY AND POSSIBLY FROM INFORMATION PROVIDED BY THE OWNER, MUNICIPAL GIS DATA, AND/OR UTILITY COMPANIES. NO EXCAVATIONS WERE MADE DURING THE COURSE OF THE SURVEY TO VERIFY OR LOCATE ANY UNDERGROUND STRUCTURES. IT IS THE RESPONSIBILITY OF THE OWNER/CONTRACTOR TO VERIFY THE LOCATION OF ANY UNDERGROUND UTILITIES PRIOR TO EXCAVATING BY CONTACTING THE APPROPRIATE UTILITY COMPANY. STATE LAW REQUIRES DIG–SAFE BE CONTACTED PRIOR TO EXCAVATION.

8. WETLANDS:

   WETLAND ON THE PROPERTY WERE DELINEATED BY TIM FORRESTER, PWS 1933, WITH ATLANTIC ENVIRONMENTAL, LLC ON SEPTEMBER 10, 2019.

9. TOPOGRAPHY:

   CONTOURS SHOWN ARE A COMBINATION OF LIDAR FROM STATE OF MAINE GIS DATABASE AND PHODAR FROM DRONE PHOTOMETRIC METHODS.

10. RECORD OWNER:

    OUELLETTE SAND & GRAVEL, INC.
    P.O. BOX 350 CHINA, MAINE 04358

PROGRESS PRINT
THIS PLAN IS ISSUED FOR REVIEW AND INFORMATION PURPOSES ONLY. THIS PLAN IS SUBJECT TO CHANGE AND IS NOT FOR PRICING OR CONSTRUCTION. PRICING BASED ON THIS PLAN IS NOT BINDING UNLESS SIGNED BY BOTH CONTRACTOR AND OWNER.

2.	03–09–20	REVISED SOLAR ARRAY LAYOUT	JJM
1.	01–27–20	SUBMISSION TO TOWN FOR PRELIMINARY REVIEW	JJM

CALL DIG SAFE UTILITY LOCATION
1-888-344-7233
STATE LAW REQUIRES ADVANCE NOTICE OF AT LEAST 3 BUSINESS DAYS BEFORE YOU DIG, GRADE OR EXCAVATE FOR THE MARKING OF UNDERGROUND UTILITIES

GRAPHIC SCALE
100 0 50 100 200
(IN FEET)
1 inch = 100 ft.

ISSUED FOR:
PERMITTING REVIEW

STATE OF MAINE
JOSEPH J. MARDEN
12828
LICENSED
PROFESSIONAL ENGINEER
03–09–20

TITLE:
EXISTING CONDITIONS PLAN

PROJECT:
SOLAR ARRAY
BELFAST RD (ROUTE 3), CHINA, ME 04358

PREPARED FOR:
SUNRAISE DEVELOPMENT, LLC
26 MARKET SQUARE, PORTSMOUTH, NH 03801

SITELINES
119 PURINTON ROAD, SUITE A
BRUNSWICK, MAINE 04011
207.725.1200
CIVIL ENGINEERS ▪ PLANNERS ▪ LAND SURVEYORS

FIELD WK: OTHERS	SCALE: 1"=60'	SHEET: C2
DRN BY: JJM	JOB #: 4028	
CH'D BY: CYN	MAP/LOT: 33/16	
DATE: 01-03-2020	FILE: 4028-SITE	

X:\LAND PROJECTS\4028 RT 3 SOLAR CHINA\DWG\4028-SITE.DWG, EX COND-DEMO, 11/15/2019 3:29 PM, JOSEPH MARDEN

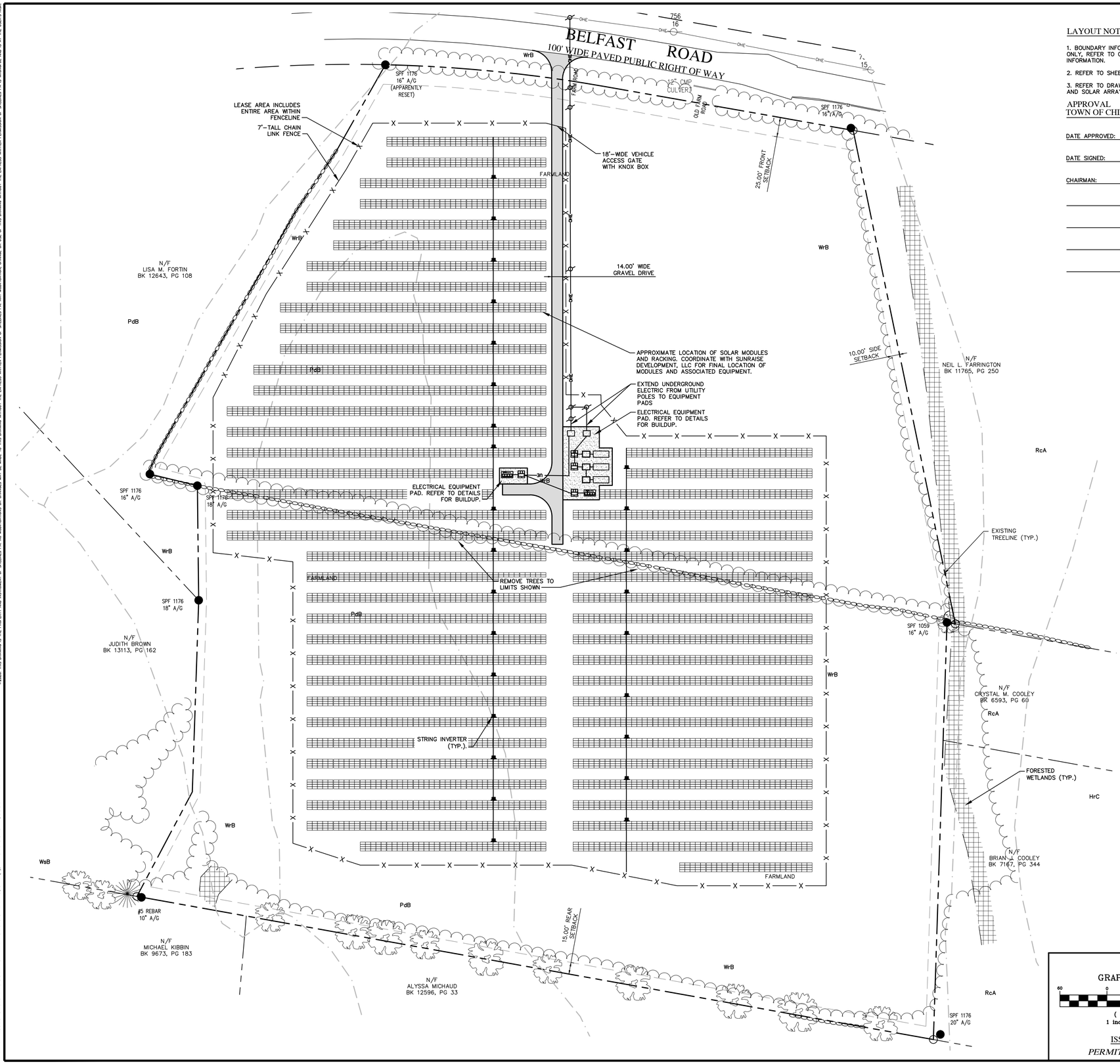

LAYOUT NOTES:

1. BOUNDARY INFORMATION ON LAYOUT PLAN IS FOR REFERENCE ONLY, REFER TO CERTIFIED BOUNDARY PLANS FOR BOUNDARY INFORMATION.
2. REFER TO SHEET C4 FOR GRADING AND DRAINAGE INFORMATION.
3. REFER TO DRAWINGS BY OTHERS FOR ELECTRICAL EQUIPMENT AND SOLAR ARRAY DETAILS

APPROVAL
TOWN OF CHINA PLANNING BOARD

DATE APPROVED: _____

DATE SIGNED: _____

CHAIRMAN: _____

MAGNETIC

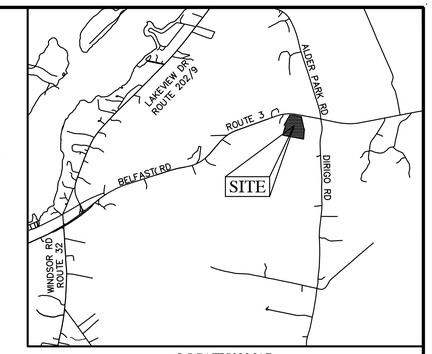

LOCATION MAP
NOT TO SCALE

RURAL ZONING DISTRICT (RD)	
ZONING STANDARD	REQUIRED
MIN. LOT SIZE:	40,000 S.F.
MIN. LOT WIDTH:	100' @ 10,000 S.F.*
SETBACKS:	
ROAD:	25'
REAR:	15'
SIDE:	10'
MAX. HEIGHT:	35'
MAX. LOT COVERAGE:*	20%
MAX. BLDG HEIGHT	35'
*LOT COVERAGE ONLY APPLIES TO STRUCTURES. DRIVEWAYS, PARKING AREAS, ETC. DO NOT APPLY TO LOT COVERAGE.	

PROJECT INFORMATION	
SIGNIFICANT WILDLIFE HABITAT:	N/A (NONE ON SITE)
SITE LAW JURISDICTIONAL ACREAGE:	12.51 ACRES
WETLAND IMPACTS:	NONE
DISTURBED AREA:	4.17 ACRES
DEVELOPED AREA:	0.36 ACRES
IMPERVIOUS AREA:	0.25 ACRES

NOTES:

1. TITLE REFERENCE FOR SURVEYED PARCEL:

   BK 8182, PG 80

2. PLAN REFERENCE(S):

   a) PLAN ENTITLED, "MAINE STATE HIGHWAY COMMISSION – RIGHT OF WAY MAP – STATE HIGHWAY 215", DATED JUNE 1962, SHEETS 4 & 5, RECORDED IN PB 29, PGs 34 & 35.

   b) PLAN ENTITLED, "PLAN OF STANDARD BOUNDARY SURVEY – HAZEL PELLERIN", DATED JUNE 1986, BY THAYER ENGINEERING CO., ON FILE WITH THE PREPARER.

3. AREA INFORMATION:

   1,004,323 SQ.FT. 23.06 ACRES

4. TAX MAP REFERENCE:

   TAX MAP 33, LOT 16.

5. BASIS OF BEARINGS:

   BEARINGS ARE GRID.

6. ROAD INFORMATION:

   BELFAST ROAD WIDTH IS 100' PER PLAN REFERENCED IN NOTE 2 ABOVE. LOCATION IS BASED ON EXISTING TRAVELED WAY LOCATED.

7. UTILITY INFORMATION:

   THERE MAY BE UNDERGROUND CONDUIT, WIRES, CABLES AND/OR STRUCTURES NOT SHOWN ON THIS PLAN. THE LOCATIONS SHOWN ARE BASED ON SURFACE FEATURES VISIBLE AT THE TIME OF SURVEY AND POSSIBLY FROM INFORMATION PROVIDED BY THE OWNER, MUNICIPAL GIS DATA, AND/OR UTILITY COMPANIES. NO EXCAVATIONS WERE MADE DURING THE COURSE OF THE SURVEY TO VERIFY OR LOCATE ANY UNDERGROUND STRUCTURES. IT IS THE RESPONSIBILITY OF THE OWNER/CONTRACTOR TO VERIFY THE LOCATION OF ANY UNDERGROUND UTILITIES PRIOR TO EXCAVATING BY CONTACTING THE APPROPRIATE UTILITY COMPANY. STATE LAW REQUIRES DIG-SAFE BE CONTACTED PRIOR TO EXCAVATION.

8. WETLANDS:

   TIM FORRESTER, PWS 1933, WITH ATLANTIC ENVIRONMENTAL, LLC ANALZED THE PROPERTY FOR WETLANDS AND NONE WERE LOCATED.

9. TOPOGRAPHY:

   CONTOURS SHOWN ARE A COMBINATION OF LIDAR FROM STATE OF MAINE GIS DATABASE AND PHODAR FROM DRONE PHOTOMETRIC METHODS.

10. RECORD OWNER:

    OUELLETTE SAND & GRAVEL, INC.
    P.O. BOX 350 CHINA, MAINE 04358

PROGRESS PRINT
THIS PLAN IS ISSUED FOR REVIEW AND INFORMATION PURPOSES ONLY. THIS PLAN IS SUBJECT TO CHANGE AND IS NOT FOR PRICING OR CONSTRUCTION. PRICING BASED ON THIS PLAN IS NOT BINDING UNLESS SIGNED BY BOTH CONTRACTOR AND OWNER.

2.	03-09-20	REVISED SOLAR ARRAY LAYOUT	JJM
1.	01-27-20	SUBMISSION TO TOWN FOR PRELIMINARY REVIEW	JJM

CALL DIG SAFE UTILITY LOCATION
1-888-344-7233
STATE LAW REQUIRES ADVANCE NOTICE OF AT LEAST 3 BUSINESS DAYS BEFORE YOU DIG GRADE OR EXCAVATE FOR THE MARKING OF UNDERGROUND UTILITIES

TITLE:
SITE LAYOUT & UTILITY PLAN

PROJECT:
SOLAR ARRAY
BELFAST RD (ROUTE 3), CHINA, ME 04358

PREPARED FOR:
SUNRAISE DEVELOPMENT, LLC
26 MARKET SQUARE, PORTSMOUTH, NH 03801

GRAPHIC SCALE
60 0 30 60 120
(IN FEET)
1 inch = 60 ft.

ISSUED FOR:
PERMITTING REVIEW

STATE OF MAINE
JOSEPH J. MARDEN
12828
LICENSED
PROFESSIONAL ENGINEER
03-09-20

SITELINES
119 PURINTON ROAD, SUITE A
BRUNSWICK, MAINE 04011
207.725.1200
CIVIL ENGINEERS ▪ PLANNERS ▪ LAND SURVEYORS

FIELD WK: OTHERS	SCALE: 1"=60'	SHEET:
DRN BY: JJM	JOB #: 4028	C3
CH'D BY: CYN	MAP/LOT: 33/16	
DATE: 01-03-2020	FILE: 4028-SITE	

©2020, THIS DRAWING IS THE PROPERTY AND INSTRUMENT OF SITELINES PA, NO MODIFICATIONS OR CHANGES MAY BE MADE TO THIS DRAWING WITHOUT THE EXPRESS WRITTEN PERMISSION OF SITELINES PA, ANY MODIFICATION, CHANGE OR USE OF THIS DRAWING WITHOUT THE EXPRESS WRITTEN PERMISSION OF SITELINES PA IS WRONGFUL AND IS AT THE USER'S RISK.

X:\LAND PROJECTS\4028 RT 3 SOLAR CHINA\DWG\4028-SITE.DWG, SITE (2), 11/15/2019 3:29 PM, JOSEPH MARDEN

©2020. THIS DRAWING IS THE PROPERTY AND INSTRUMENT OF SITELINES PA, NO MODIFICATIONS OR CHANGES MAY BE MADE TO THIS DRAWING WITHOUT THE EXPRESS WRITTEN PERMISSION OF SITELINES PA, ANY MODIFICATION, CHANGE OR USE OF THIS DRAWING WITHOUT THE EXPRESS WRITTEN PERMISSION OF SITELINES PA IS WRONGFUL AND IS AT THE USER'S RISK.

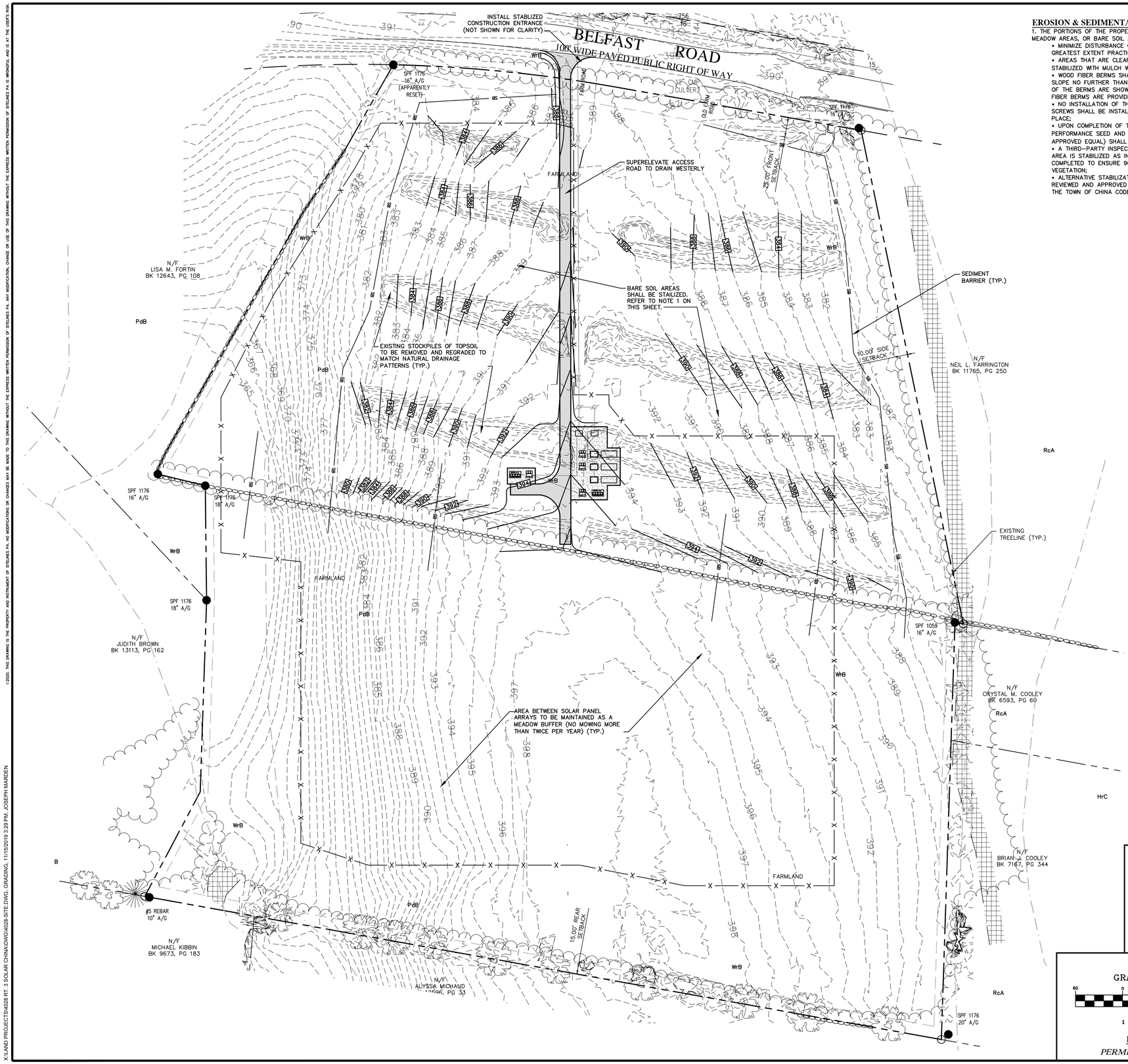

EROSION & SEDIMENTATION CONTROL NOTES:

1. THE PORTIONS OF THE PROPERTY TO BE CONVERTED FROM WOODED TO MEADOW AREAS, OR BARE SOIL AREAS, SHALL BE STABILIZED AS FOLLOWS:
   - MINIMIZE DISTURBANCE OF SOILS WITHIN WOODED AREAS TO THE GREATEST EXTENT PRACTICABLE DURING CLEARING AND STUMPING;
   - AREAS THAT ARE CLEARED AND STUMPED, OR FILLED, SHALL BE STABILIZED WITH MULCH WITHIN SEVEN (7) DAYS;
   - WOOD FIBER BERMS SHALL BE CONSTRUCTED PARALLEL ALONG THE SLOPE NO FURTHER THAN 100 FEET APART. THE APPROXIMATE LOCATIONS OF THE BERMS ARE SHOWN ON THIS PLAN AND THE DETAIL FOR THE WOOD FIBER BERMS ARE PROVIDED ON SHEET C9;
   - NO INSTALLATION OF THE SOLAR ARRAY AND ASSOCIATED GROUND SCREWS SHALL BE INSTALLED UNTIL THE MULCH COVER AND BERMS ARE IN PLACE;
   - UPON COMPLETION OF THE INSTALLATION OF THE SOLAR ARRAY, A HIGH PERFORMANCE SEED AND MULCH MIX (GEOPERM BONDED FIBER MATRIX OR APPROVED EQUAL) SHALL BE APPLIED TO THE AREA;
   - A THIRD-PARTY INSPECTOR SHALL BE ONSITE TO ENSURE THAT THE AREA IS STABILIZED AS INDICATED ABOVE. REGULAR INSPECTIONS SHALL BE COMPLETED TO ENSURE 90% VEGETATIVE COVERAGE WITH HEALTHY MEADOW VEGETATION;
   - ALTERNATIVE STABILIZATION MEASURES ARE ALLOWED BUT SHALL BE REVIEWED AND APPROVED BY THE DESIGN ENGINEER IN CONSULTATION WITH THE TOWN OF CHINA CODE ENFORCEMENT OFFICER.

GRADING AND DRAINAGE NOTES:

1. THE CONTRACTOR SHALL PHASE GRADING EFFORTS SUCH THAT TOTAL SITE DISTURBANCE IS MINIMIZED. TEMPORARY EROSION CONTROL MEASURES SHALL BE INSTALLED PRIOR TO GRADING EFFORTS OR WITHOUT DELAY UPON THEIR COMPLETION, DEPENDENT UPON THE SITUATION.

2. ALL FILL SLOPES SHALL BE A MINIMUM OF 3:1 HORIZONTAL TO VERTICAL UNLESS OTHERWISE NOTED OR DIRECTED.

3. THE LIMITS OF DISTURBANCE SHALL GENERALLY BE THE MINIMAL EXTENT NECESSARY ONLY TO PERFORM THE GRADING EFFORTS SHOWN ON THE DRAWINGS. SPECIAL CARE SHALL BE TAKEN TO AVOID DISTURBANCE OF OBJECTS AND AREAS NOT SPECIFICALLY IDENTIFIED FOR MODIFICATION OR REMOVAL.

4. ALL DISTURBED AREAS SHALL BE LOAMED AND SEEDED IN ACCORDANCE WITH THE DRAWINGS, UNLESS INTENDED FOR OTHER SURFACE COVER.

5. WHERE FINAL GRADING HAS BEEN COMPLETED, SURFACE RESTORATION FOR DISTURBED AREAS WILL BE COMPLETED AS SOON AS PRACTICABLE. FOR VEGETATIVE AREAS, VEGETATION WILL BE PROGRESSIVELY ESTABLISHED.

6. TRANSITIONS BETWEEN SLOPES ARE TO BE GENERALLY GRADUAL AND RESULT IN A SMOOTH, ROUNDED APPEARANCE.

MAGNETIC

PROGRESS PRINT
THIS PLAN IS ISSUED FOR REVIEW AND INFORMATION PURPOSES ONLY. THIS PLAN IS SUBJECT TO CHANGE AND IS NOT FOR PRICING OR CONSTRUCTION. PRICING BASED ON THIS PLAN IS NOT BINDING UNLESS SIGNED BY BOTH CONTRACTOR AND OWNER.

2.	03-09-20	REVISED SOLAR ARRAY LAYOUT	JJM
1.	01-27-20	SUBMISSION TO TOWN FOR PRELIMINARY REVIEW	JJM

CALL DIG SAFE UTILITY LOCATION
1-888-344-7233
STATE LAW REQUIRES ADVANCE NOTICE OF AT LEAST 3 BUSINESS DAYS BEFORE YOU DIG, GRADE OR EXCAVATE FOR THE MARKING OF UNDERGROUND UTILITIES

TITLE: GRADING, DRAINAGE, & EROSION CONTROL PLAN

PROJECT:
SOLAR ARRAY
BELFAST RD (ROUTE 3), CHINA, ME 04358

PREPARED FOR:
SUNRAISE DEVELOPMENT, LLC
26 MARKET SQUARE, PORTSMOUTH, NH 03801

GRAPHIC SCALE
60 0 30 60 120
(IN FEET)
1 inch = 60 ft.

ISSUED FOR:
PERMITTING REVIEW

STATE OF MAINE JOSEPH J. MARDEN 12828 LICENSED PROFESSIONAL ENGINEER
03-09-20

SITELINES
119 PURINTON ROAD, SUITE A
BRUNSWICK, MAINE 04011
207.725.1200
CIVIL ENGINEERS ▪ PLANNERS ▪ LAND SURVEYORS

FIELD WK: OTHERS	SCALE: 1"=60'	SHEET: C4
DRN BY: JJM	JOB #: 4028	
CH'D BY: CYN	MAP/LOT: 33/16	
DATE: 01-03-2020	FILE: 4028-SITE	

X:\LAND PROJECTS\4028 RT 3 SOLAR CHINA\DWG\4028-SITE DWG, GRADING, 11/15/2019 3:29 PM, JOSEPH MARDEN

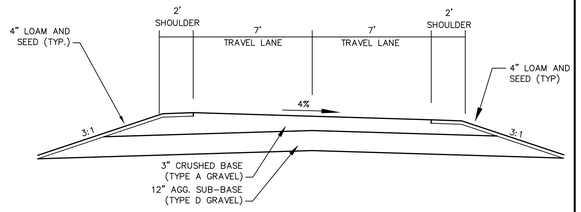

NOTES:
1. ANY LEDGE ENCOUNTERED SHALL BE REMOVED TO PROVIDE A MINIMUM OF 3" OF BASE GRAVELS AND 6" OF SUBBASE GRAVELS.

A ACCESS ROAD SECTION
N.T.S.

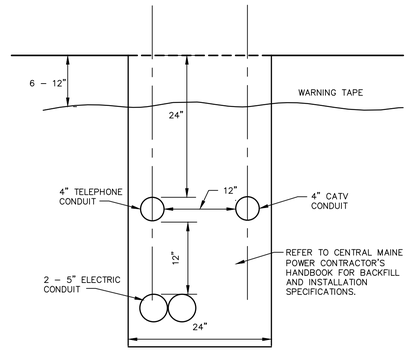

B UTILITY TRENCH
N.T.S.

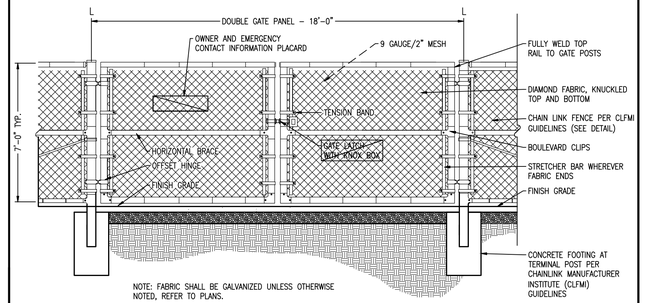

NOTE: FABRIC SHALL BE GALVANIZED UNLESS OTHERWISE NOTED, REFER TO PLANS.

C VEHICLE GATE
N.T.S.

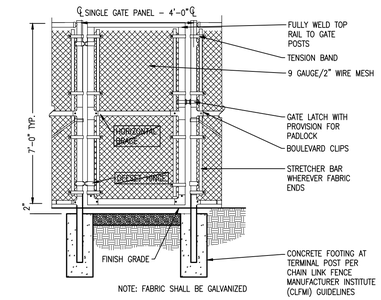

NOTE: FABRIC SHALL BE GALVANIZED

D MAN GATE
N.T.S.

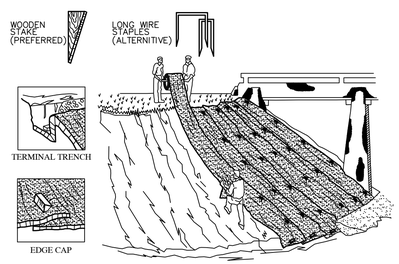

GENERAL INSTALLATION GUIDELINES
1. UNROLL MAT ONTO GROUND IN DIRECTION OF WATER FLOW.
2. MAT SHOULD LIE FLAT. DO NOT STRETCH MAT OVER GROUND. STRETCHING MAY CAUSE MAT TO BRIDGE DEPRESSIONS IN THE SURFACE AND ALLOW EROSION UNDERNEATH.
3. BURY TRANSVERSE TERMINAL ENDS OF MAT TO SECURE AND PREVENT EROSIVE FLOW UNDERNEATH.
4. SECURE MAT SNUGLY INTO ALL TRANSVERSE CHECK SLOTS.
5. BACKFILL AND COMPACT TRENCHES AND CHECK SLOTS AFTER STAKING THE MAT IN BOTTOM OF TRENCH.
6. OVERLAP ROLL ENDS BY THREE (3) FEET (MIN.) WITH UPSLOPE MAT ON TOP TO PREVENT UPLIFT OF MAT END BY WATER FLOW. IF INSTALLING IN THE DIRECTION OF A CONCENTRATED WATER FLOW, START NEW ROLLS IN A TRANSVERSE DITCH.
7. WOOD STAKES ARE RECOMMENDED FOR PINNING MAT TO THE GROUND SURFACE. STAKES SHOULD BE 1"x 3" NOMINAL STOCK CUT IN A TRIANGULAR SHAPE. STAKES SHOULD BE 12" TO 18" LONG, DEPENDING ON SOIL DENSITY.
8. DRIVE WOODEN STAKES TO WITHIN THREE (3) INCHES OF GROUND SURFACE. DO NOT DRIVE FLUSH TO SURFACE.
9. IN ALL TRANSVERSE TERMINAL TRENCHES AND CHECK SLOTS, STAKE EACH MAT AT IS CENTER AND OVERLAP EDGES BEFORE BACKFILLING AND COMPACTING.
10. STAKE OVERLAPS LONGITUDINALLY AT THREE (3) TO FIVE (5) FOOT INTERVALS.

E EROSION CONTROL BLANKET
N.T.S.

NOTE: THE "TERRAFARM" RACKING AND GROUND SCREW FOUNDATIONS ARE DESIGNED BY TERRASMART AND WILL BE A SUBMITTAL BY SUNRAISE. THE INFORMATION SHOWN HERE IS FOR REFERENCE ONLY. 4X6 RACKING CONFIGURATION SHOWN IN THIS DETAIL AS REFERENCE. ACTUAL RACK SIZE FOR THIS PROJECT MAY VARY.

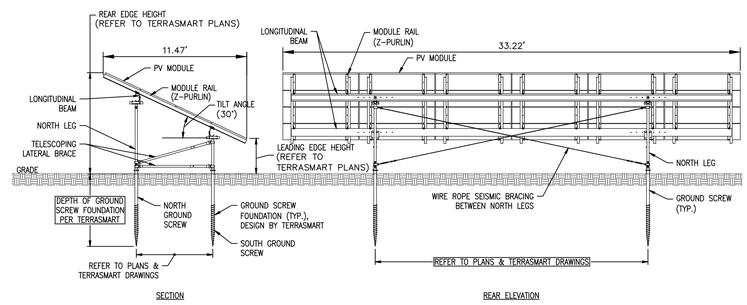

NOTE: DIMENSION SHOWN FOR SOLAR TABLE ASSUME A 30° TILT OF THE SOLAR PANELS.

F TYPICAL RACK SECTION & REAR ELEVATION
N.T.S.

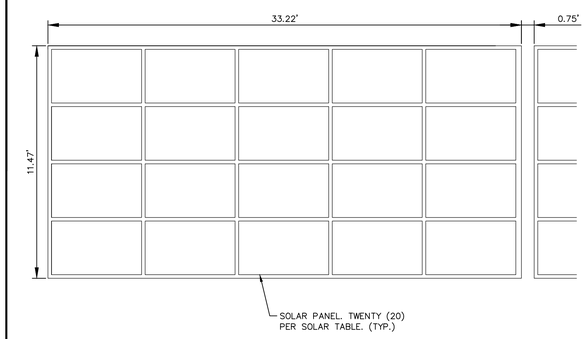

NOTE: DIMENSION SHOWN FOR SOLAR TABLE ASSUME A 30° TILT OF THE SOLAR PANELS.

G SOLAR TABLE DETAIL
N.T.S.

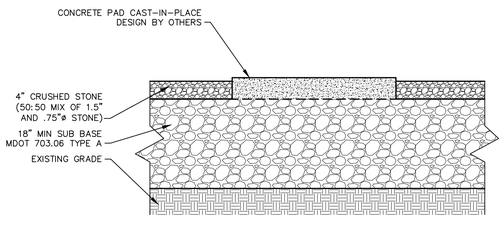

H EQUIPMENT PAD AREA SECTION
N.T.S.

I NOT USED
N.T.S.

J NOT USED
N.T.S.

2.	03-09-20	REVISED SOLAR ARRAY LAYOUT	JJM
1.	01-27-20	SUBMISSION TO TOWN FOR PRELIMINARY REVIEW	JJM

PROGRESS PRINT
THIS PLAN IS ISSUED FOR REVIEW AND INFORMATION PURPOSES ONLY. THIS PLAN IS SUBJECT TO CHANGE AND IS NOT FOR PRICING OR CONSTRUCTION. PRICING BASED ON THIS PLAN IS NOT BINDING UNLESS SIGNED BY BOTH CONTRACTOR AND OWNER.

TITLE: SITE DETAILS

PROJECT: SOLAR ARRAY
BELFAST RD (ROUTE 3), CHINA, ME 04358

OWNER: SUNRAISE DEVELOPMENT, LLC
26 MARKET SQUARE, PORTSMOUTH, NH 03801

STATE OF MAINE
JOSEPH J. MARDEN
12828
LICENSED
PROFESSIONAL ENGINEER
03-09-20

SITELINES
119 PURINTON ROAD, SUITE A
BRUNSWICK, MAINE 04011
207.725.1200
CIVIL ENGINEERS ▪ PLANNERS ▪ LAND SURVEYORS

FIELD WK: OTHERS	SCALE: NTS	SHEET: C5
DRN BY: JJM	JOB #: 4028	
CH'D BY: CYN	MAP/LOT: 33/16	
DATE: 01-03-2020	FILE: 4028-COVER-DET	

©2020. THIS DRAWING IS THE PROPERTY AND INSTRUMENT OF SITELINES PA, NO MODIFICATIONS OR CHANGES MAY BE MADE TO THIS DRAWING WITHOUT THE EXPRESS WRITTEN PERMISSION OF SITELINES PA, ANY MODIFICATION, CHANGE OR USE OF THIS DRAWING WITHOUT THE EXPRESS WRITTEN PERMISSION OF SITELINES PA IS WRONGFUL AND IS AT THE USER'S RISK.

X:\LAND PROJECTS\4028 RT. 3 SOLAR CHINA\DWG\4028-COVER-DET.DWG, C5-DETAILS, 11/15/2019 3:29:33 PM, JOSEPH MARDEN

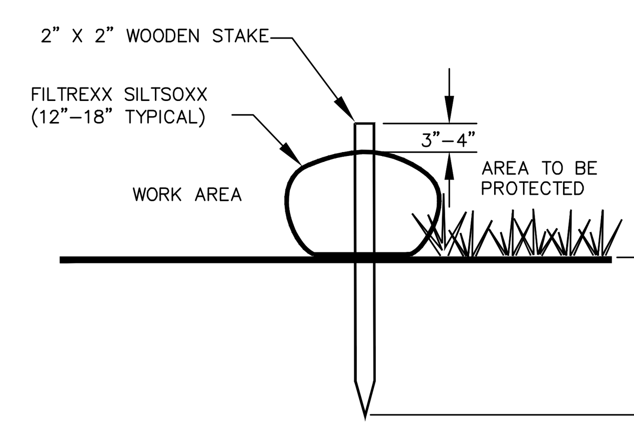

SECTION

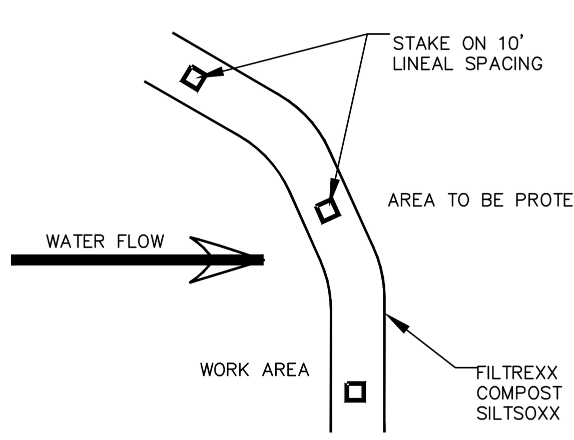

PLAN

NOTES:
1. ALL MATERIALS TO MEET FILTREXX SPECIFICATIONS
2. SILTSOXX COMPOST/SOIL/ROCK/SEED FILL TO MEET APPLICATION REQUIREMENTS
3. SILTSOXX DEPICTED IS FOR MINIMUM SLOPES. GREATER SLOPES MAY REQUIRE LARGER SOCKS PER THE ENGINEER.
4. COMPOST MATERIAL TO BE DISPERSED ON SITE, AS DETERMINED BY ENGINEER.
5. THE SILTSOXX SHALL BE INSTALLED PER MANUFACTURER'S RECOMMENDATIONS.

A — FILTREXX SILTSOXX DETAIL "SEDIMENT BARRIER OPTION"
N.T.S.

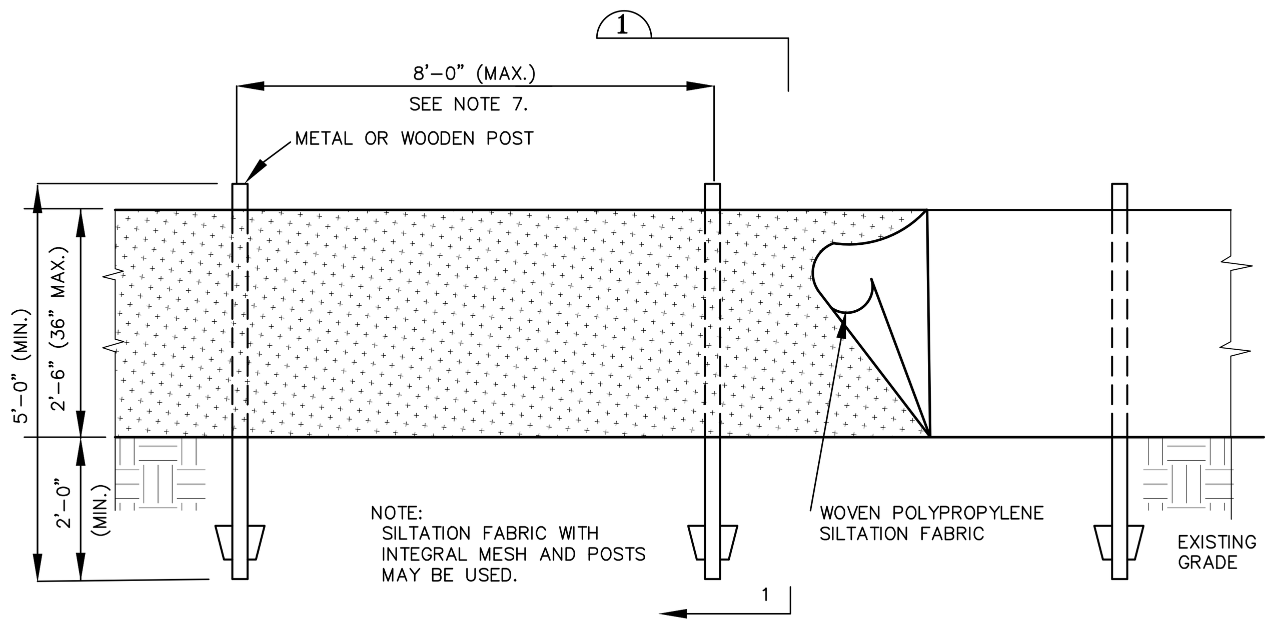

ELEVATION

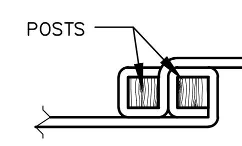

TOP VIEW

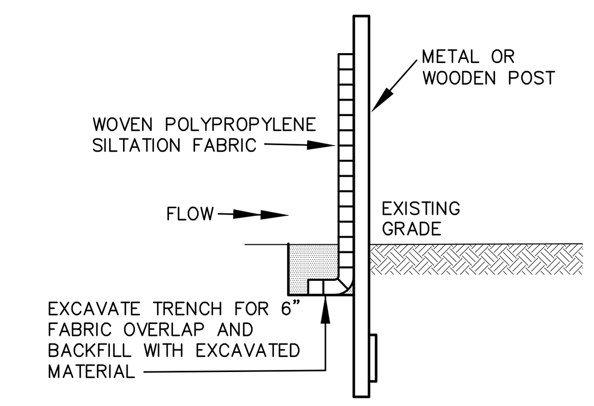

SECTION 1

INSTALLATION:
1. EXCAVATE A 6" X 6" TRENCH ALONG THE LINE OF PLACEMENT FOR THE FILTER BARRIER.
2. UNROLL A SECTION AT A TIME AND POSITION THE POSTS AGAINST THE BACK (DOWNSTREAM) WALL OF THE TRENCH.
3. DRIVE POSTS INTO THE GROUND UNTIL APPROXIMATELY 2" OF FABRIC IS LYING ON THE TRENCH BOTTOM.
4. LAY THE TOE–IN FLAP OF FABRIC ONTO THE UNDISTURBED BOTTOM OF THE TRENCH. BACK FILL THE TRENCH AND TAMP THE SOIL.
5. JOIN SECTION AS SHOWN IN TOP VIEW.
6. BARRIER SHALL BE MIRAFI SILT FENCE (100X) OR APPROVED EQUIVALENT.
7. A STONE "FILLET" MAY BE USED FOR ANCHORING FABRIC IF IT CANNOT BE KEYED IN.

B — SILT FENCE DETAIL "SEDIMENT BARRIER OPTION"
N.T.S.

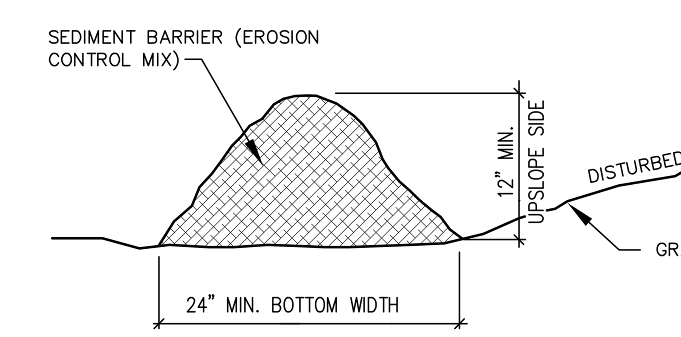

NOTES:
1. THE EROSION CONTROL MIX SHALL CONTAIN A WELL GRADED MIXTURE OF PARTICLE SIZES AND MAY CONTAIN ROCKS LESS THAN 4" DIAMETER. EROSION CONTROL MIX MUST BE FREE OF REFUSE, PHYSICAL CONTAMINANTS, AND MATERIAL TOXIC TO PLANT GROWTH.

2.PLACE BARRIER ALONG A RELATIVELY FLAT CONTOUR. CUT TALL GRASSES OR WOODY VEGETATION TO AVOID CREATING VOIDS AND BRIDGES WHERE FINES CAN WASH UNDER THE BARRIER THROUGH GRASS BLADES AND BRANCHES.

3.PLACEMENT OF BARRIER SHOULD BE:
- AT TOE OF THE SLOPE.
- FROZEN GROUND, BEDROCK OR ROOTED FORESTED AREAS.
- THE EDGE OF GRAVEL AND AREAS UNDER CONSTRUCTION.

4. REMOVE SEDIMENT DEPOSITS WHEN THEY REACH APPROXIMATELY ONE HALF THE HEIGHT OF THE BARRIER.

5. WHEN BARRIER IS DECOMPOSED, CLOGGED WITH SEDIMENT, ERODED OR INEFFECTIVE, IT MUST BE REPLACED OR REPAIRED. THE BARRIER SHOULD BE RESHAPED AS NECESSARY.

C — EROSION CONTROL BERM "SEDIMENT BARRIER OPTION"
N.T.S.

EROSION AND SEDIMENTATION NOTES:
1. CONTRACTOR SHALL FOLLOW BEST MANAGEMENT PRACTICES OF THE CUMBERLAND COUNTY SOIL CONSERVATION SERVICE AND THE MAINE DEP BEST MANAGEMENT PRACTICES HANDBOOK.

GENERAL EROSION AND SEDIMENTATION CONTROL PRACTICES:
EROSION/SEDIMENT CONTROL DEVICES:
THE FOLLOWING EROSION SEDIMENTATION CONTROL DEVICES ARE PROPOSED FOR CONSTRUCTION ON THIS PROJECT. INSTALL THESE DEVICES AS INDICATED ON THE PLANS.

1. SEDIMENT BARRIER: SILTSOXX OR APPROVED EQUAL WILL BE INSTALLED ALONG THE DOWN GRADING EDGES OF DISTURBED AREAS TO TRAP RUNOFF BORNE SEDIMENTS UNTIL THE SITE IS STABILIZED. IN AREAS WHERE STORMWATER DISCHARGES THE SEDIMENT BARRIER WILL BE REINFORCED WITH HAY BALES TO HELP MAINTAIN THE INTEGRITY OF THE SEDIMENT BARRIER AND TO PROVIDE ADDITIONAL TREATMENT.

2. HAY BALES: HAY BALES TO BE PLACED IN LOW FLOW DRAINAGE SWALES AND PATHS TO TRAP SEDIMENTS AND REDUCE RUNOFF VELOCITIES. DO NOT PLACE HAY BALES IN FLOWING WATER OR STREAMS.

3. RIPRAP: PROVIDE RIPRAP IN AREAS WHERE CULVERTS DISCHARGE OR AS SHOWN ON THE PLANS.

4. LOAM, SEED, & MULCH: ALL DISTURBED AREAS, WHICH ARE NOT OTHERWISE TREATED, SHALL RECEIVE PERMANENT SEEDING AND MULCH TO STABILIZE THE DISTURBED AREAS. THE DISTURBED AREAS WILL BE REVEGETATED WITHIN 5 DAYS OF FINAL GRADING. SEEDING REQUIREMENTS ARE PROVIDED AT THE END OF THIS SPECIFICATION.

5. STRAW AND HAY MULCH: USED TO COVER DENUDED AREAS UNTIL PERMANENT SEED OR EROSION CONTROL MEASURES ARE IN PLACE. MULCH BY ITSELF CAN BE USED ON SLOPES LESS THAN 15% IN SUMMER AND 8% IN WINTER. JUTE MESH IS TO BE USED OVER MULCH ONLY.

6. IN LIEU OF MULCH, USE EROSION CONTROL BLANKET (EQUAL TO NORTH AMERICAN GREEN SC150) TO STABILIZE AREAS OF CONCENTRATED FLOW AND DRAINAGE WAYS.

TEMPORARY EROSION/SEDIMENTATION CONTROL MEASURES:
PROVIDE THE FOLLOWING TEMPORARY EROSION/SEDIMENTATION CONTROL MEASURES DURING CONSTRUCTION OF THE DEVELOPMENT:

1. SEDIMENT BARRIER ALONG THE DOWNGRADIENT SIDE OF THE PARKING AREAS AND OF ALL FILL SECTIONS. THE SEDIMENT BARRIER WILL REMAIN IN PLACE UNTIL THE SITE IS 85% REVEGETATED.

2. HAY BALES PLACED AT KEY LOCATIONS TO SUPPLEMENT THE SEDIMENT BARRIER.

3. PROTECT TEMPORARY STOCKPILES OF STUMPS, GRUBBINGS, OR COMMON EXCAVATION AS FOLLOWS:
A. SOIL STOCKPILE SIDE SLOPES SHALL NOT EXCEED 2:1.
B. AVOID PLACING TEMPORARY STOCKPILES IN AREAS WITH SLOPES OVER 10 PERCENT, OR NEAR DRAINAGE SWALES. SEE ITEM 3 IN CONSTRUCTION PHASE NOTES BELOW.
C. STABILIZE STOCKPILES WITHIN 7 DAYS BY TEMPORARILY SEEDING WITH A HYDROSEED METHOD CONTAINING AN EMULSIFIED MULCH TACKIFIER OR BY COVERING THE STOCKPILE WITH MULCH.
D. SURROUND STOCKPILE SOIL WITH SEDIMENT BARRIER AT BASE OF PILE.

4. ALL DENUDED AREAS WHICH HAVE BEEN ROUGH GRADED AND ARE NOT LOCATED WITHIN THE BUILDING PAD, OR PARKING AND DRIVEWAY SUBBASE AREA SHALL RECEIVE MULCH WITHIN 30 DAYS OF INITIAL DISTURBANCE OF SOIL OR WITHIN 7 DAYS AFTER COMPLETING THE ROUGH GRADING OPERATIONS. IN THE EVENT THE CONTRACTOR COMPLETES FINAL GRADING AND INSTALLATION OF LOAM AND SOD WITHIN THE TIME PERIODS PRESENTED ABOVE, INSTALLATION OF MULCH AND NETTING, WHERE APPLICABLE, IS NOT REQUIRED.

5. IF WORK IS CONDUCTED BETWEEN OCTOBER 15 AND APRIL 15, ALL DENUDED AREAS ARE TO BE COVERED WITH HAY MULCH, APPLIED AT TWICE THE NORMAL APPLICATION RATE, AND ANCHORED WITH FABRIC NETTING. THE PERIOD BETWEEN FINAL GRADING AND MULCHING SHALL BE REDUCED TO A 15 DAY MAXIMUM.

6. TEMPORARY EROSION CONTROL MEASURES SHALL BE REMOVED ONCE THE SITE HAS BEEN STABILIZED OR IN AREAS WHERE PERMANENT EROSION CONTROL MEASURES HAVE BEEN INSTALLED.

7. WHENEVER PRACTICABLE, NO DISTURBANCE ACTIVITIES SHOULD TAKE PLACE WITHIN 50 FEET OF ANY WETLAND. IF DISTURBANCE ACTIVITIES TAKE PLACE BETWEEN 30 FEET AND 50 FEET OF ANY WETLAND, AND STORMWATER DISCHARGES THROUGH THE DISTURBED AREAS TOWARD THE WETLAND, PERIMETER EROSION CONTROLS MUST BE DOUBLED. IF DISTURBANCE ACTIVITIES TAKE PLACE LESS THAN 30 FEET FROM ANY PROTECTED NATURAL RESOURCE, AND STORMWATER DISCHARGES THROUGH THE DISTURBED AREAS TOWARD THE PROTECTED NATURAL RESOURCE, PERIMETER EROSION CONTROLS MUST BE DOUBLED AND DISTURBED AREAS MUST BE TEMPORARILY OR PERMANENTLY STABILIZED WITHIN 7 DAYS.

8. AREAS WITHIN 75 FT OF A WETLAND WILL BE STABILIZED WITHIN 48 HOURS OF INITIAL DISTURBANCE OF THE SOIL OR PRIOR TO ANY STORM EVENT, WHICHEVER COMES FIRST.

9. ALL AREAS WITHIN 75 FEET OF A WETLAND MUST BE PROTECTED WITH A DOUBLE ROW OF SEDIMENT BARRIERS DURING WINTER CONSTRUCTION (NOVEMBER 1 THROUGH APRIL 15).

10. TEMPORARY SEDIMENT BASINS MAY BE INSTALLED DOWNGRADIENT OF THE DISTURBED AREAS. THESE BASINS MUST BE DESIGNED TO PROVIDE STORAGE FOR EITHER THE CALCULATED RUNOFF FROM A 2–YEAR, 24–HOUR STORM OR PROVIDE FOR 3,600 CUBIC FEET OF CAPACITY PER ACRE DRAINING TO THE BASIN. OUTLET STRUCTURES MUST DISCHARGE WATER FROM THE SURFACE OF THE BASIN WHENEVER POSSIBLE. EROSION CONTROLS AND VELOCITY DISSIPATION DEVICES MUST BE USED IF THE DISCHARGING WATERS ARE LIKELY TO CREATE EROSION. ACCUMULATED SEDIMENT MUST BE REMOVED AS NEEDED FROM THE BASIN TO MAINTAIN AT LEAST ½ OF THE DESIGN CAPACITY OF THE BASIN.

PERMANENT EROSION CONTROL MEASURES:
THE FOLLOWING PERMANENT CONTROL MEASURES ARE REQUIRED BY THIS EROSION/SEDIMENTATION CONTROL PLAN:

1. ALL AREAS DISTURBED DURING CONSTRUCTION, BUT NOT SUBJECT TO OTHER RESTORATION (PAVING, RIPRAP, ETC.), WILL BE LOAMED, LIMED, FERTILIZED AND SEEDED. NATIVE TOPSOIL SHALL BE STOCKPILED AND REUSED FOR FINAL RESTORATION WHEN IT IS OF SUFFICIENT QUALITY.

2. SLOPES GREATER THAN 2:1 WILL RECEIVE RIPRAP. (NONE ANTICIPATED)

POST-CONSTRUCTION REVEGETATION:
THE FOLLOWING GENERAL PRACTICES WILL BE USED TO PREVENT EROSION AS SOON AS AN AREA IS READY TO UNDERGO FINAL GRADING.

1. A MINIMUM OF 6" OF LOAM WILL BE SPREAD OVER DISTURBED AREAS AND GRADED TO A UNIFORM DEPTH AND NATURAL APPEARANCE, OR STONE WILL BE PLACED ON SLOPES TO STABILIZE SURFACES.

2. IF FINAL GRADING IS REACHED DURING THE NORMAL GROWING SEASON (4/15 TO 9/15), PERMANENT SEEDING WILL BE DONE AS SPECIFIED BELOW. PRIOR TO SEEDING, LIMESTONE SHALL BE APPLIED AT A RATE OF 138 LBS/1000 SQ. FT. AND 10:20:20 FERTILIZER AT A RATE OF 18.4 LBS/1000 SQ.FT WILL BE APPLIED. BROADCAST SEEDING AT THE FOLLOWING RATES:

LAWNS SHALL BE: ALLEN, STERLING & LATHROP 'TUFFTURF', 70% DIAMOND TALL FESCUE, 20% PLEASURE OLUS PERENNIAL RYEGRASS, 10% BARON KENTUCKY BLUEGRASS. SEEDING RATE SHALL BE 7–LBS./1,000 SQ. FT.

SWALES SHALL BE: WILDFLOWER MEADOW: (SEED) FESTUCA OVINA SHEEP FESCUE; SOW AT A RATE OF 12 OZ. PER 1,000 SQFT. TRIFOLIUM REPENS WHITE CLOVER; SOW AT A RATE OF ½ OZ.PER 1,000 SQFT. (FLOWERS) ACHILLEA MILLEFOLIUM YARROW, AQUILEGEA CANADENSIS COLUMBINE, ASCLEPIAS TUBEROSE BUTTERFLY MILKWEED, ASTER NOVAE–ANGLIAE NEW–ENGLAND ASTER, BAPTISIA AUSTRALIS WILD INDIGO, BOLTONIA ASTEROIDS FALSE ASTER, CHRYSANTHEMUM LEUCANTHEMUM OXEYE DAISY, DIGITALIS PURPUREA FOXGLOVE, ECHINACEA PURPUREA PURPLE CONEFLOWER, LUPINUS PERENNIS LUPINE, MONARDA FISTULOSA BERGAMOT, PAPAVER ORIENTALE ORIENTAL POPY, RUDBECKIA HIRTA BLACK–EYED SUSAN, SALVIA OFFICINALIS SAGE; SOW AT A RATE OF 1/3 OZ. EACH PER 1,000 SQFT. OR 4 OZ. PER 1,000 SQFT. IN COMBINATION

3. AN AREA SHALL BE MULCHED IMMEDIATELY AFTER IS HAS BEEN SEEDED. MULCHING SHALL CONSIST OF HAY MULCH, HYDRO–MULCH, JUTE NET OVER MULCH, PRE–MANUFACTURED EROSION MATS OR ANY SUITABLE SUBSTITUTE DEEMED ACCEPTABLE BY THE DESIGNER.
A. HAY MULCH SHALL BE APPLIED AT THE RATE OF 2 TONS PER ACRE. HAY MULCH SHALL BE SECURED BY EITHER: (NOTE: SOIL SHALL NOT BE VISIBLE)
I. BEING DRIVEN OVER BY TRACKED CONSTRUCTION EQUIPMENT ON GRADES OF 5% AND LESS.
II. BLANKETED BY TACKED PHOTODEGRADABLE/BIODEGRADABLE NETTING, OR WITH SPRAY, ON GRADES GREATER THAN 5%.
III. SEE NOTE 6, GENERAL NOTES, AND NOTE 8, WINTER CONSTRUCTION.
B. HYDRO–MULCH SHALL CONSIST OF A MIXTURE OF EITHER ASPHALT, WOOD FIBER OR PAPER FIBER AND WATER SPRAYED OVER A SEEDED AREA. HYDRO–MULCH SHALL NOT BE USED BETWEEN 9/15 AND 4/15.

4. CONSTRUCTION SHALL BE PLANNED TO ELIMINATE THE NEED FOR SEEDING BETWEEN SEPTEMBER 15 AND APRIL 15. SHOULD SEEDING BE NECESSARY BETWEEN SEPTEMBER 15 AND APRIL 15 THE FOLLOWING PROCEDURE SHALL BE FOLLOWED. ALSO REFER TO NOTE 9 OF WINTER CONSTRUCTION.
A. ONLY UNFROZEN LOAM SHALL BE USED.
B. LOAMING, SEEDING AND MULCHING WILL NOT BE DONE OVER SNOW OR ICE COVER. IF SNOW EXISTS, IT MUST BE REMOVED PRIOR TO PLACEMENT OF SEED.
C. WHERE PERMANENT SEEDING IS NECESSARY, ANNUAL WINTER RYE (1.2 LBS/1000 SQ.FT) SHALL BE ADDED TO THE PREVIOUSLY NOTED AREAS.
D. WHERE TEMPORARY SEEDING IS REQUIRED, ANNUAL WINTER RYE (2.6 LBS/1000 SQ. FT.) SHALL BE SOWN INSTEAD OF THE PREVIOUSLY NOTED SEEDING RATE.
E. FERTILIZING, SEEDING AND MULCHING SHALL BE APPLIED TO LOAM THE DAY THE LOAM IS SPREAD BY MACHINERY.
F. ALTERNATIVE HAY MULCH SHALL BE SECURED WITH PHOTODEGRADABLE/BIODEGRADABLE NETTING. TRACKING BY MACHINERY ALONE WILL NOT SUFFICE.

5. FOLLOWING FINAL SEEDING, THE SITE WILL BE INSPECTED EVERY 30 DAYS UNTIL 85% COVER HAS BEEN ESTABLISHED. RESEEDING WILL BE CARRIED OUT BY THE CONTRACTOR WITHIN 10 DAYS OF NOTIFICATION BY THE ENGINEER THAT THE EXISTING CATCH IS INADEQUATE.

MONITORING SCHEDULE:
THE CONTRACTOR IS RESPONSIBLE FOR INSTALLING, MONITORING, MAINTAINING, REPAIRING, REPLACING AND REMOVING ALL OF THE EROSION AND SEDIMENTATION CONTROLS OR APPOINTING A QUALIFIED SUBCONTRACTOR TO DO SO. MAINTENANCE MEASURES WILL BE APPLIED AS NEEDED DURING THE ENTIRE CONSTRUCTION CYCLE. AFTER EACH RAINFALL, A VISUAL INSPECTION WILL BE MADE OF ALL EROSION AND SEDIMENTATION CONTROLS AS FOLLOWS:

1. HAY BALE BARRIERS, SEDIMENT BARRIER, AND STONE CHECK DAMS SHALL BE INSPECTED AND REPAIRED ONCE A WEEK OR IMMEDIATELY FOLLOWING ANY SIGNIFICANT RAINFALL. SEDIMENT TRAPPED BEHIND THESE BARRIERS SHALL BE EXCAVATED WHEN IT REACHES A DEPTH OF 6" AND REDISTRIBUTED TO AREAS UNDERGOING FINAL GRADING. SHOULD THE HAY BALE BARRIERS PROVE TO BE INEFFECTIVE, THE CONTRACTOR SHALL INSTALL SEDIMENT BARRIER BEHIND THE HAY BALES.

2. VISUALLY INSPECT RIPRAP ONCE A WEEK OR AFTER EACH SIGNIFICANT RAINFALL AND REPAIR AS NEEDED. REMOVE SEDIMENT TRAPPED BEHIND THESE DEVICES ONCE IT ATTAINS A DEPTH EQUAL TO 1/2 THE HEIGHT OF THE DAM OR RISER. DISTRIBUTE REMOVED SEDIMENT OFF–SITE OR TO AN AREA UNDERGOING FINAL GRADING.

3. REVEGETATION OF DISTURBED AREAS WITHIN 25' OF DRAINAGE–COURSE/STREAM WILL BE SEEDED WITH THE "MEADOW AREA MIX" AND INSPECTED ON A WEEKLY BASIS OR AFTER EACH SIGNIFICANT RAINFALL AND RESEEDED AS NEEDED. EXPOSED AREAS WILL BE RESEEDED AS NEEDED UNTIL THE AREA HAS OBTAINED 100% GROWTH RATE. PROVIDE PERMANENT RIPRAP FOR SLOPES IN EXCESS OF 3:1 AND WITHIN 25' OF DRAINAGE COURSE.

HOUSEKEEPING:
SPILL PREVENTION. CONTROLS MUST BE USED TO PREVENT POLLUTANTS FROM CONSTRUCTION AND WASTE MATERIALS STORED ON SITE TO ENTER STORMWATER, WHICH INCLUDES STORAGE PRACTICES TO MINIMIZE EXPOSURE OF THE MATERIALS TO STORMWATER. THE SITE CONTRACTOR MUST DEVELOP, AND IMPLEMENT AS NECESSARY, APPROPRIATE SPILL PREVENTION, CONTAINMENT, AND RESPONSE PLANNING MEASURES.

NOTE: ANY SPILL OR RELEASE OF TOXIC OR HAZARDOUS SUBSTANCES MUST BE REPORTED TO THE DEPARTMENT. FOR OIL SPILLS, CALL 1–800–482–0777 WHICH IS AVAILABLE 24 HOURS A DAY. FOR SPILLS OF TOXIC OR HAZARDOUS MATERIAL, CALL 1–800–452–4664 WHICH IS AVAILABLE 24 HOURS A DAY. FOR MORE INFORMATION, VISIT THE DEPARTMENTS WEBSITE AT : HTTP://WWW.MAINE.GOV/DEP/SPILLS/EMERGSPILLRESP/

GROUNDWATER PROTECTION. DURING CONSTRUCTION, LIQUID PETROLEUM PRODUCTS AND OTHER HAZARDOUS MATERIALS WITH THE POTENTIAL TO CONTAMINATE GROUNDWATER MAY NOT BE STORED OR HANDLED IN AREAS OF THE SITE DRAINING TO AN INFILTRATION AREA. AN "INFILTRATION AREA" IS ANY AREA OF THE SITE THAT BY DESIGN OR AS A RESULT OF SOILS, TOPOGRAPHY AND OTHER RELEVANT FACTORS ACCUMULATES RUNOFF THAT INFILTRATES INTO THE SOIL. DIKES, BERMS, SUMPS, AND OTHER FORMS OF SECONDARY CONTAINMENT THAT PREVENT DISCHARGE TO GROUNDWATER MAY BE USED TO ISOLATE PORTIONS OF THE SITE FOR THE PURPOSES OF STORAGE AND HANDLING OF THESE MATERIALS. ANY PROJECT PROPOSING INFILTRATION OF STORMWATER MUST PROVIDE ADEQUATE PRE–TREATMENT OF STORMWATER PRIOR TO DISCHARGE OF STORMWATER TO THE INFILTRATION AREA, OR PROVIDE FOR TREATMENT WITHIN THE INFILTRATION AREA, IN ORDER TO PREVENT THE ACCUMULATION OF FINES, REDUCTION IN INFILTRATION RATE, AND CONSEQUENT FLOODING AND DESTABILIZATION.

NOTE: LACK OF APPROPRIATE POLLUTANT REMOVAL BEST MANAGEMENT PRACTICES (BMPS) MAY RESULT IN VIOLATIONS OF THE GROUNDWATER QUALITY STANDARD ESTABLISHED BY 38 M.R.S.A. §465–C(1).

FUGITIVE SEDIMENT AND DUST. ACTIONS MUST BE TAKEN TO ENSURE THAT ACTIVITIES DO NOT RESULT IN NOTICEABLE EROSION OF SOILS OR FUGITIVE DUST EMISSIONS DURING OR AFTER CONSTRUCTION. OIL MAY NOT BE USED FOR DUST CONTROL, BUT OTHER WATER ADDITIVES MAY BE CONSIDERED AS NEEDED. A STABILIZED CONSTRUCTION ENTRANCE (SCE) SHALL BE INSTALLED AT THE END OF THE EXIST PAVED ACCESS TO THE SITE TO MINIMIZE TRACKING OF MUD AND SEDIMENT. IF OFF–SITE TRACKING OCCURS, PUBLIC ROADS SHOULD BE SWEPT IMMEDIATELY AND NO LESS THAN ONCE A WEEK AND PRIOR TO SIGNIFICANT STORM EVENTS. OPERATIONS DURING DRY MONTHS, THAT EXPERIENCE FUGITIVE DUST PROBLEMS, SHOULD WET DOWN UNPAVED ACCESS ROADS ONCE A WEEK OR MORE FREQUENTLY AS NEEDED WITH A WATER ADDITIVE TO SUPPRESS FUGITIVE SEDIMENT AND DUST.

DEBRIS AND OTHER MATERIALS. MINIMIZE THE EXPOSURE OF CONSTRUCTION DEBRIS, BUILDING AND LANDSCAPING MATERIALS, TRASH, FERTILIZERS, PESTICIDES, HERBICIDES, DETERGENTS, SANITARY WASTE AND OTHER MATERIALS TO PRECIPITATION AND STORMWATER RUNOFF. THESE MATERIALS MUST BE PREVENTED FROM BECOMING A POLLUTANT SOURCE.

EXCAVATION DE–WATERING. EXCAVATION DE–WATERING IS THE REMOVAL OF WATER FROM TRENCHES, FOUNDATIONS, COFFER DAMS, PONDS, AND OTHER AREAS WITHIN THE CONSTRUCTION AREA THAT RETAIN WATER AFTER EXCAVATION. NO EXCAVATION DEWATERING IS ANTICIPATED FOR THIS PROJECT. SHOULD IT BE NECESSARY, THE COLLECTED WATER REMOVED FROM THE PONDED AREA, EITHER THROUGH GRAVITY OR PUMPING, MUST BE SPREAD THROUGH NATURAL WOODED BUFFERS OR REMOVED TO AREAS THAT ARE SPECIFICALLY DESIGNED TO COLLECT THE MAXIMUM AMOUNT OF SEDIMENT POSSIBLE, LIKE A COFFERDAM SEDIMENTATION BASIN. AVOID ALLOWING THE WATER TO FLOW OVER DISTURBED AREAS OF THE SITE. A DEWATERING DISCHARGE PLAN SHALL BE SUBMITTED TO THE OWNER'S REPRESENTATIVE FOR APPROVAL.

AUTHORIZED NON–STORMWATER DISCHARGES. IDENTIFY AND PREVENT CONTAMINATION BY NON–STORMWATER DISCHARGES. WHERE ALLOWED NON–STORMWATER DISCHARGES ARE NECESSARY, THEY MUST BE IDENTIFIED AND STEPS SHOULD BE TAKEN TO ENSURE THE IMPLEMENTATION OF APPROPRIATE POLLUTION PREVENTION MEASURES FOR THE NON–STORMWATER COMPONENT(S) OF THE DISCHARGE. AUTHORIZED NON–STORMWATER DISCHARGES ARE:

(a) DISCHARGES FROM FIREFIGHTING ACTIVITY;
(b) PAVEMENT WASHWATER (WHERE SPILLS/LEAKS OF TOXIC OR HAZARDOUS MATERIALS HAVE NOT OCCURRED, UNLESS ALL SPILLED MATERIAL HAD BEEN REMOVED) IF DETERGENTS ARE NOT USED;
(c) UNCONTAMINATED GROUNDWATER OR SPRING WATER;
(d) FOUNDATION OR FOOTER DRAIN–WATER WHERE FLOWS ARE NOT CONTAMINATED;
(e) UNCONTAMINATED EXCAVATION DEWATERING (SEE REQUIREMENTS IN APPENDIX C(5));
(f) POTABLE WATER SOURCES INCLUDING WATERLINE FLUSHINGS; AND
(g) LANDSCAPE IRRIGATION.

UNAUTHORIZED NON–STORMWATER DISCHARGES. THE CONTRACTOR IS NOT AUTHORIZED A DISCHARGE THAT IS MIXED WITH A SOURCE OF NON STORMWATER. SPECIFICALLY, THE DEPARTMENT'S APPROVAL DOES NOT AUTHORIZE DISCHARGES OF THE FOLLOWING:

(a) WASTEWATER FROM THE WASHOUT OR CLEANOUT OF CONCRETE, STUCCO, PAINT, FORM RELEASE OILS, CURING COMPOUNDS OR OTHER CONSTRUCTION MATERIALS;
(b) FUELS, OILS OR OTHER POLLUTANTS USED IN VEHICLE AND EQUIPMENT OPERATION AND MAINTENANCE;
(c) SOAPS, SOLVENTS, OR DETERGENTS USED IN VEHICLE AND EQUIPMENT WASHING; AND
(d) TOXIC OR HAZARDOUS SUBSTANCES FROM A SPILL OR OTHER RELEASE.

CONSTRUCTION PHASE:
THE FOLLOWING GENERAL PRACTICES WILL BE USED TO PREVENT EROSION DURING CONSTRUCTION OF THIS PROJECT.

1. INSTALL STABILIZED CONSTRUCTION ENTRANCE AND MAINTAIN UNTIL SITE IS PAVED.

2. ONLY THOSE AREAS NECESSARY FOR CONSTRUCTION WILL BE DISTURBED.

3. PRIOR TO THE START OF CONSTRUCTION, SEDIMENT BARRIER WILL BE INSTALLED ACROSS THE SLOPE(S), ON THE CONTOUR, AT OR JUST BELOW THE LIMITS OF CLEARING OR GRUBBING, AND/OR JUST ABOVE ANY ADJACENT TRAVELLED WAY TO PROTECT IT FROM CONSTRUCTION–RELATED EROSION.

4. CLEAR AND GRUB WORK SITE AS NEEDED TO EXECUTE PLANS USING CAUTION NOT TO OVER EXPOSE THE SITE.

5. STORMWATER MANAGEMENT SYSTEM WILL BE INSTALLED PRIOR TO CONSTRUCTION OF SITE ELEMENTS THAT DISCHARGE TO THESE SYSTEMS. CATCH BASIN INLET PROTECTION SHALL BE INSTALLED IN ALL NEW AND EXISTING CATCH BASINS THAT WILL RECEIVE RUNOFF FROM THE PROJECT. NO STORMWATER SHOULD BE DIRECTED TO ANY STORMWATER BASINS UNTIL THE SITE IS COMPLETELY STABILIZED.

6. DISTURBED AREAS WILL BE PERMANENTLY STABILIZED WITHIN 15 DAYS OF FINAL GRADING, OR TEMPORARILY STABILIZED WITHIN 30 DAYS OF THE INITIAL DISTURBANCES OF SOILS. DISTURBED AREAS WILL BE STABILIZED BEFORE STORMS. LOAM WILL BE SAVED FOR LATER USE WHERE POSSIBLE. EXCESS SOIL MATERIALS WILL BE USED AS FILL OR REMOVED FROM SITE TO AN APPROVED LOCATION.

7. AT A MINIMUM, THE EROSION CONTROL MEASURES SHALL BE REVIEWED AND REPAIRED ONCE A WEEK OR IMMEDIATELY FOLLOWING ANY SIGNIFICANT RAINFALL OR SNOWMELT. SEDIMENT TRAPPED BEHIND THESE BARRIERS SHALL BE EXCAVATED WHEN IT REACHES A DEPTH OF 6 INCHES AND BE DISCARDED ON THE SITE. ALL EROSION CONTROL MEASURES SHALL BE INSTALLED AS INDICATED ON THE DRAWINGS.

8. CONSTRUCT PAVEMENT AREAS AND BUILDINGS.

9. LOAM, LIME, FERTILIZE, SEED, AND MULCH LANDSCAPED AND OTHER DISTURBED AREAS.

10. ONCE THE SITE IS STABILIZED AND A 90% CATCH OF VEGETATION HAS BEEN OBTAINED, REMOVE ALL TEMPORARY EROSION CONTROL MEASURES.

11. TOUCH UP LOAM AND SEED.

NOTE: ALL DENUDED AREAS NOT SUBJECT TO FINAL PAVING, RIPRAP OR GRAVEL SHALL BE REVEGETATED.

EROSION CONTROL DURING WINTER CONSTRUCTION:
1. WINTER CONSTRUCTION PERIOD: NOVEMBER 1 THROUGH APRIL 15.

2. WINTER EXCAVATION AND EARTHWORK SHALL BE COMPLETED SUCH THAT NO MORE THAN 1 ACRE OF THE SITE IS WITHOUT STABILIZATION AT ANY ONE TIME.

3. EXPOSED AREA SHALL BE LIMITED TO THOSE AREAS TO BE MULCHED IN ONE DAY PRIOR TO ANY SNOW EVENT. AT THE END OF EACH WORK WEEK NO AREAS MAY BE LEFT UNSTABILIZED OVER THE WEEKEND.

4. CONTINUATION OF EARTHWORK OPERATIONS ON ADDITIONAL AREAS SHALL NOT BEGIN UNTIL THE EXPOSED SOIL SURFACE ON THE AREA BEING WORKED HAS BEEN STABILIZED, SUCH THAT NO LARGER AREA OF THE SITE IS WITHOUT EROSION CONTROL PROTECTION AS LISTED IN ITEM 2 ABOVE.

5. AN AREA SHALL BE CONSIDERED TO HAVE BEEN STABILIZED WHEN EXPOSED SURFACES HAVE BEEN EITHER MULCHED WITH STRAW OR HAY AT A RATE OF 150 LB. PER 1000 S.F. (WITH OR WITHOUT SEEDING) OR DORMANT SEEDED, MULCHED AND ANCHORED SUCH THAT SOIL SURFACE IS NOT VISIBLE THROUGH THE MULCH. NOTE: AN AREA IS ALSO CONSIDERED STABLE IF SODDED, COVERED WITH GRAVEL (PARKING LOTS) OR STRUCTURAL SAND.

6. BETWEEN THE DATES OF OCTOBER 15 AND APRIL 1, LOAM OR SEED WILL NOT BE REQUIRED. DURING PERIODS OF ABOVE FREEZING TEMPERATURES THE SLOPES SHALL BE FINE GRADED AND EITHER PROTECTED WITH MULCH OR TEMPORARILY SEEDED AND MULCHED UNTIL SUCH TIME AS THE FINAL TREATMENT CAN BE APPLIED. IF THE DATE IS AFTER NOVEMBER 1 AND IF THE EXPOSED AREA HAS BEEN LOAMED, FINAL GRADED WITH A UNIFORM SURFACE, THEN THE AREA MAY BE DORMANT SEEDED AT A RATE OF 3 TIMES HIGHER THAN SPECIFIED FOR PERMANENT SEED AND THEN MULCHED. IF CONSTRUCTION CONTINUES DURING FREEZING WEATHER, ALL EXPOSED AREAS SHALL BE CONTINUOUSLY GRADED BEFORE FREEZING AND THE SURFACE TEMPORARILY PROTECTED FROM EROSION BY THE APPLICATION OF MULCH. SLOPES SHALL NOT BE LEFT UNEXPOSED OVER THE WINTER OR ANY OTHER EXTENDED TIME OF WORK SUSPENSION UNLESS TREATED IN THE ABOVE MANNER. UNTIL SUCH TIME AS WEATHER CONDITIONS ALLOW, DITCHES TO BE FINISHED WITH THE PERMANENT SURFACE TREATMENT, EROSION SHALL BE CONTROLLED BY THE INSTALLATION OF BALES OF HAY, SEDIMENT BARRIER OR STONE CHECK DAMS IN ACCORDANCE WITH THE STANDARD DETAILS SHOWN ON THE DESIGN DRAWINGS. NOTE: DORMANT SEEDING SHOULD NOT BE ATTEMPTED UNLESS SOIL TEMPERATURE REMAINS BELOW 50 DEGREES AND DAY TIME TEMPERATURES REMAIN IN THE 30'S.

7. MULCH NETTING SHALL BE USED TO ANCHOR MULCH IN ALL DRAINAGE WAYS, SLOPES GREATER THAN 3% FOR SLOPES EXPOSED TO DIRECT WINDS AND FOR ALL OTHER SLOPES GREATER THAN 8%. VEGETATED DRAINAGE SWALES SHALL BE LINED WITH STRAW–COCONUT EROSION CONTROL BLANKET (NORTH AMERICAN GREEN SC150 OR APPROVED EQUAL).

8. BETWEEN THE DATES OF OCTOBER 15 TO NOVEMBER 1, WINTER RYE IS RECOMMENDED FOR STABILIZATION. AFTER NOVEMBER 1, WINTER RYE IS NOT EFFECTIVE. AROUND NOVEMBER 15 OR LATER, ONCE TEMPERATURES OF THE AIR AND SOIL PERMIT, DORMANT SEEDING IS EFFECTIVE.

9. IN THE EVENT OF SNOWFALL (FRESH OR CUMULATIVE) GREATER THAN 1 INCH DURING WINTER CONSTRUCTION PERIOD ALL SNOW SHALL BE REMOVED FROM THE AREAS OF SEEDING AND MULCHING PRIOR TO PLACEMENT.

SITE INSPECTION AND MAINTENANCE:
1. WEEKLY INSPECTIONS, AS WELL AS ROUTINE INSPECTIONS FOLLOWING RAIN FALLS, SHALL BE CONDUCTED BY THE GENERAL CONTRACTOR OF ALL TEMPORARY AND PERMANENT EROSION CONTROL DEVICES UNTIL FINAL ACCEPTANCE OF THE PROJECT (85% GRASS CATCH). NECESSARY REPAIRS SHALL BE MADE TO CORRECT UNDERMINING OR DETERIORATION. FINAL ACCEPTANCE SHALL INCLUDE A SITE INSPECTION TO VERIFY THE STABILITY OF ALL DISTURBED AREAS AND SLOPES. UNTIL FINAL INSPECTION, ALL EROSION AND SEDIMENTATION CONTROL MEASURES SHALL IMMEDIATELY BE CLEANED, AND REPAIRED BY THE GENERAL CONTRACTOR AS REQUIRED. DISPOSAL OF ALL TEMPORARY EROSION AND CONTROL DEVICES SHALL BE THE RESPONSIBILITY OF THE GENERAL CONTRACTOR.

IT IS RECOMMENDED THAT THE OWNER HIRE THE SERVICES OF THE DESIGN ENGINEER TO PROVIDE COMPLIANCE INSPECTIONS (DURING ACTIVE CONSTRUCTION) RELATIVE TO IMPLEMENTATION OF THE STORMWATER AND EROSION CONTROL PLANS. SUCH INSPECTIONS SHOULD BE LIMITED TO ONCE A WEEK OR AS NECESSARY AND BE REPORTABLE TO THE OWNER, TOWN AND DEP.

2. SHORT–TERM SEDIMENTATION MAINTENANCE SHALL BE THE RESPONSIBILITY OF THE CONTRACTOR TO CLEAN OUT ALL SWALES AND STRUCTURES PRIOR TO TURNING PROJECT OVER.

3. LONG–TERM PROVISIONS FOR PERMANENT MAINTENANCE OF ALL EROSION AND SEDIMENTATION CONTROL DEVICES AFTER ACCEPTANCE OF THE PROJECT SHALL BE THE RESPONSIBILITY OF THE OWNER.

2.	03–09–20	REVISED SOLAR ARRAY LAYOUT	JJM
1.	01–27–20	SUBMISSION TO TOWN FOR PRELIMINARY REVIEW	JJM

PROGRESS PRINT
THIS PLAN IS ISSUED FOR REVIEW AND INFORMATION PURPOSES ONLY. THIS PLAN IS SUBJECT TO CHANGE AND IS NOT FOR PRICING OR CONSTRUCTION. PRICING BASED ON THIS PLAN IS NOT BINDING UNLESS SIGNED BY BOTH CONTRACTOR AND OWNER.

TITLE: EROSION CONTROL DETAILS AND NOTES

PROJECT: SOLAR ARRAY
BELFAST RD (ROUTE 3), CHINA, ME 04358

OWNER: SUNRAISE DEVELOPMENT, LLC
26 MARKET SQUARE, PORTSMOUTH, NH 03801

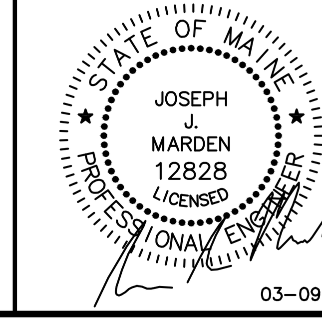

03–09–20

SITELINES
119 PURINTON ROAD, SUITE A
BRUNSWICK, MAINE 04011
207.725.1200
CIVIL ENGINEERS ▪ PLANNERS ▪ LAND SURVEYORS

FIELD WK: OTHERS	SCALE: NTS	SHEET: C6
DRN BY: JJM	JOB #: 4028	
CH'D BY: CYN	MAP/LOT: 33/16	
DATE: 01-03-2020	FILE: 4028-COVER-DET	

X:\LAND PROJECTS\4028 RT. 3 SOLAR CHINA\DWG\4028-COVER-DET.DWG, C6 EROSION, 11/15/2019 3:29:33 PM, JOSEPH MARDEN

©2020. THIS DRAWING IS THE PROPERTY AND INSTRUMENT OF SITELINES PA. NO MODIFICATIONS OR CHANGES MAY BE MADE TO THIS DRAWING WITHOUT THE EXPRESS WRITTEN PERMISSION OF SITELINES PA. ANY MODIFICATION, CHANGE OR USE OF THIS DRAWING WITHOUT THE EXPRESS WRITTEN PERMISSION OF SITELINES PA IS WRONGFUL AND IS AT THE USER'S RISK.

©2020, THIS DRAWING IS THE PROPERTY AND INSTRUMENT OF SITELINES PA, NO MODIFICATIONS OR CHANGES MAY BE MADE TO THIS DRAWING WITHOUT THE EXPRESS WRITTEN PERMISSION OF SITELINES PA, ANY MODIFICATION, CHANGE OR USE OF THIS DRAWING WITHOUT THE EXPRESS WRITTEN PERMISSION OF SITELINES PA IS WRONGFUL AND IS AT THE USER'S RISK.

X:\LAND PROJECTS\4028 RT 3 SOLAR CHINA\DWG\4028-SITE.DWG, PRE-DEV, 11/15/2019 3:29 PM, JOSEPH MARDEN

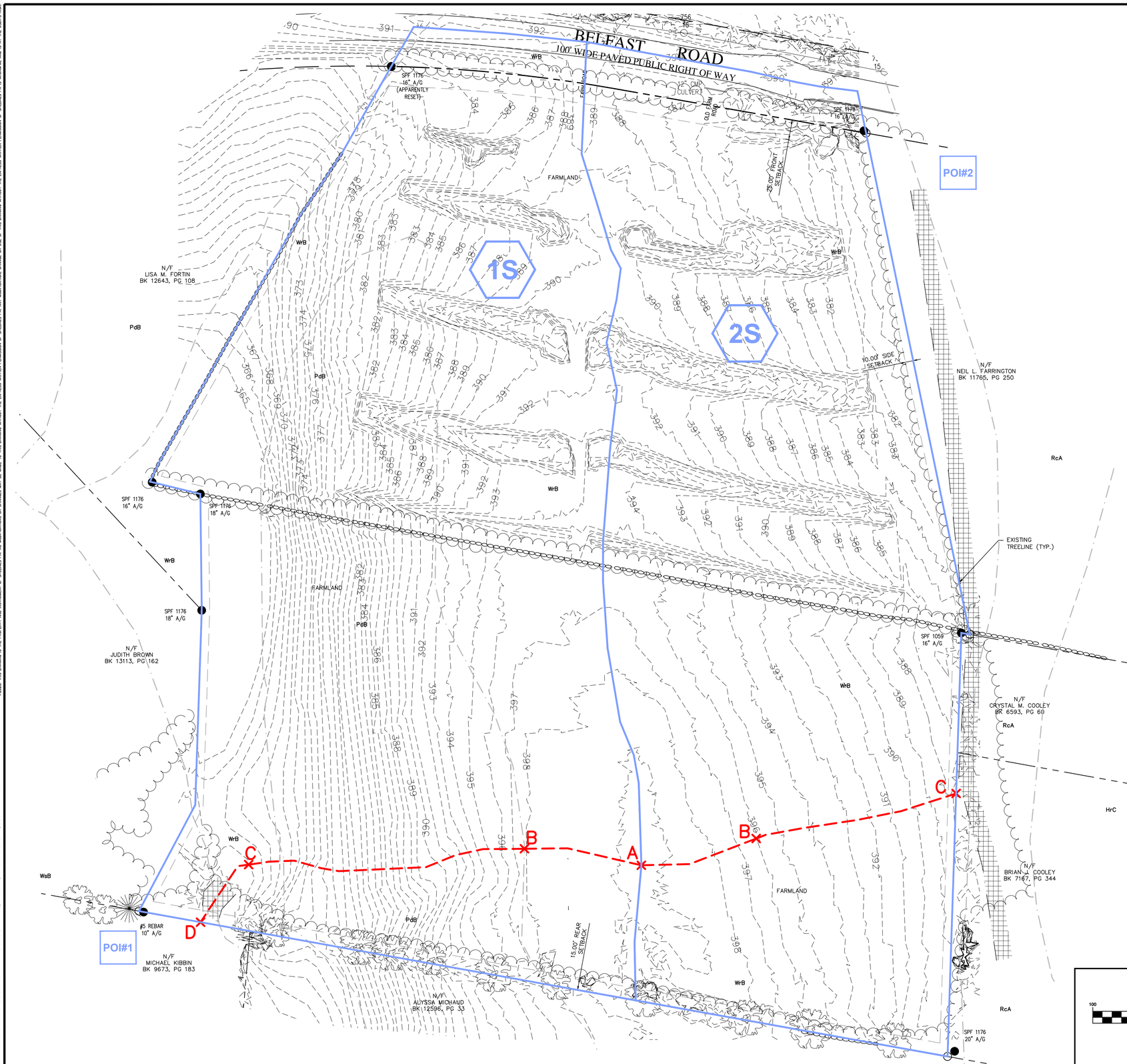

LEGEND:

- POI#1 — POINT OF INTEREST
- 1S — SUBCATCHMENT AREA
- SOIL BOUNDARY

MAGNETIC

PROGRESS PRINT

THIS PLAN IS ISSUED FOR REVIEW AND INFORMATION PURPOSES ONLY. THIS PLAN IS SUBJECT TO CHANGE AND IS NOT FOR PRICING OR CONSTRUCTION. PRICING BASED ON THIS PLAN IS NOT BINDING UNLESS SIGNED BY BOTH CONTRACTOR AND OWNER.

2.	03-09-20	REVISED SOLAR ARRAY LAYOUT	JJM
1.	01-27-20	SUBMISSION TO TOWN FOR PRELIMINARY REVIEW	JJM

CALL DIG SAFE UTILITY LOCATION

1-888-344-7233

STATE LAW REQUIRES ADVANCE NOTICE OF AT LEAST 3 BUSINESS DAYS BEFORE YOU DIG, GRADE OR EXCAVATE FOR THE MARKING OF UNDERGROUND UTILITIES

TITLE:

PRE-DEVELOPMENT WATERSHED MAP

PROJECT:

SOLAR ARRAY

BELFAST RD (ROUTE 3), CHINA, ME 04358

PREPARED FOR:

SUNRAISE DEVELOPMENT, LLC

26 MARKET SQUARE, PORTSMOUTH, NH 03801

GRAPHIC SCALE

100 0 50 100 200

(IN FEET)
1 inch = 100 ft.

ISSUED FOR:

PERMITTING REVIEW

STATE OF MAINE
JOSEPH J. MARDEN
12828
LICENSED
PROFESSIONAL ENGINEER

03-09-20

SITELINES
119 PURINTON ROAD, SUITE A
BRUNSWICK, MAINE 04011
207.725.1200
CIVIL ENGINEERS ▪ PLANNERS ▪ LAND SURVEYORS

FIELD WK: OTHERS	SCALE: 1"=100'	SHEET: D1
DRN BY: JJM	JOB #: 4028	
CH'D BY: CYN	MAP/LOT: 12/28	
DATE: 01-03-2020	FILE: 3992-SITE	

© 2020, THIS DRAWING IS THE PROPERTY AND INSTRUMENT OF SITELINES PA, NO MODIFICATIONS OR CHANGES MAY BE MADE TO THIS DRAWING WITHOUT THE EXPRESS WRITTEN PERMISSION OF SITELINES PA, ANY MODIFICATION, CHANGE OR USE OF THIS DRAWING WITHOUT THE EXPRESS WRITTEN PERMISSION OF SITELINES PA IS WRONGFUL AND IS AT THE USER'S RISK.

X:\LAND PROJECTS\4028 RT 3 SOLAR CHINA\DWG\4028-SITE.DWG, POST-DEV, 11/15/2019 3:29 PM, JOSEPH MARDEN

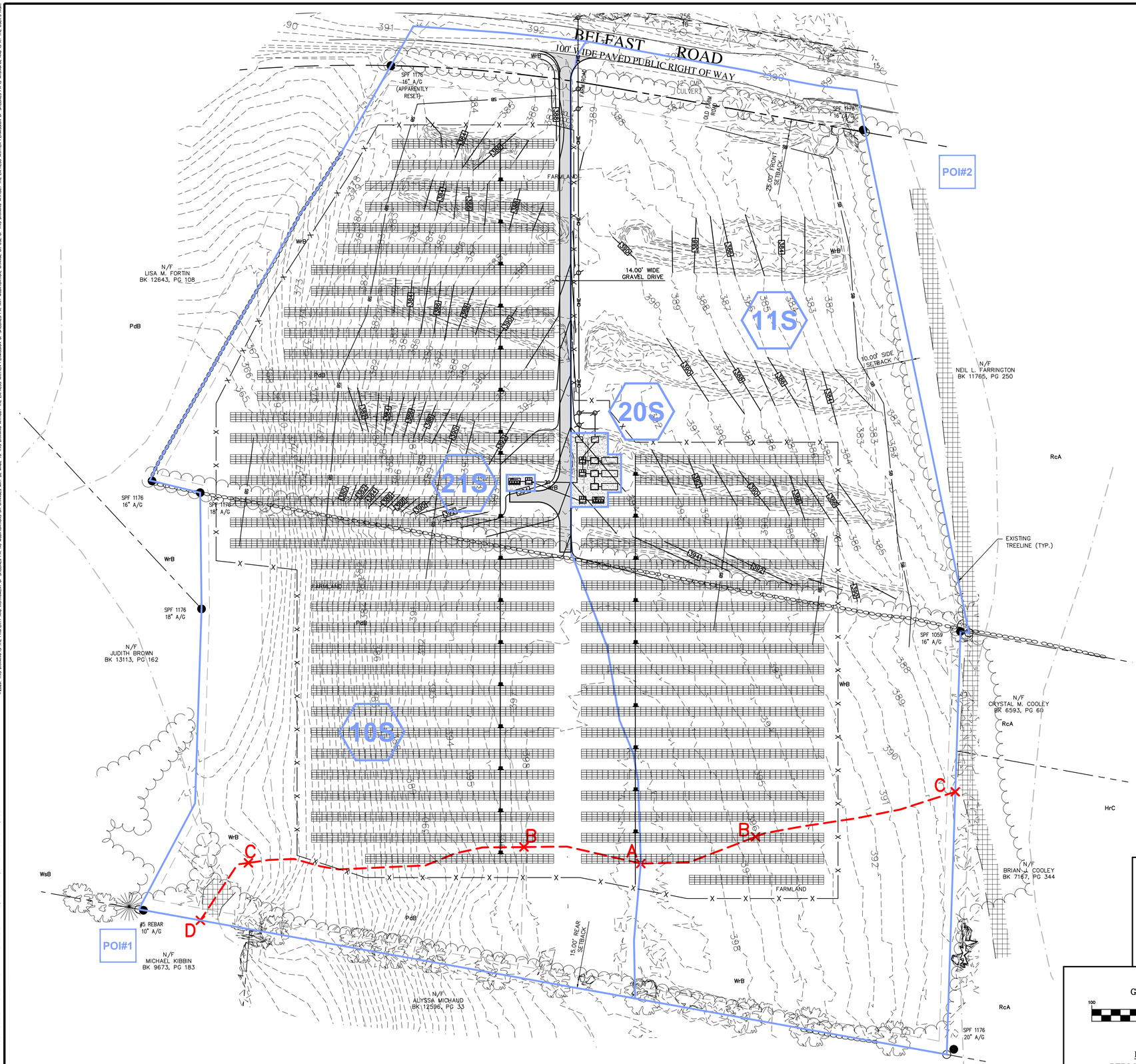

LEGEND:

- POI#1 — POINT OF INTEREST
- 1S — SUBCATCHMENT AREA
- SOIL BOUNDARY

MAGNETIC

PROGRESS PRINT
THIS PLAN IS ISSUED FOR REVIEW AND INFORMATION PURPOSES ONLY. THIS PLAN IS SUBJECT TO CHANGE AND IS NOT FOR PRICING OR CONSTRUCTION. PRICING BASED ON THIS PLAN IS NOT BINDING UNLESS SIGNED BY BOTH CONTRACTOR AND OWNER.

2.	03-09-20	REVISED SOLAR ARRAY LAYOUT	JJM
1.	01-27-20	SUBMISSION TO TOWN FOR PRELIMINARY REVIEW	JJM

CALL DIG SAFE UTILITY LOCATION
1-888-344-7233
STATE LAW REQUIRES ADVANCE NOTICE OF AT LEAST 3 BUSINESS DAYS BEFORE YOU DIG, GRADE OR EXCAVATE FOR THE MARKING OF UNDERGROUND UTILITIES

TITLE:
POST-DEVELOPMENT WATERSHED MAP

PROJECT:
SOLAR ARRAY
BELFAST RD (ROUTE 3), CHINA, ME 04358

PREPARED FOR:
SUNRAISE DEVELOPMENT, LLC
26 MARKET SQUARE, PORTSMOUTH, NH 03801

GRAPHIC SCALE
100 0 50 100 200
(IN FEET)
1 inch = 100 ft.

ISSUED FOR:
PERMITTING REVIEW

STATE OF MAINE
JOSEPH J. MARDEN
12828
LICENSED
PROFESSIONAL ENGINEER
03-09-20

SITELINES
119 PURINTON ROAD, SUITE A
BRUNSWICK, MAINE 04011
207.725.1200
CIVIL ENGINEERS ▪ PLANNERS ▪ LAND SURVEYORS

FIELD WK: OTHERS	SCALE: 1"=100'	SHEET: D2
DRN BY: JJM	JOB #: 4028	
CH'D BY: CYN	MAP/LOT: 12/28	
DATE: 01-03-2020	FILE: 3992-SITE	

United States Department of Agriculture

NRCS

Natural Resources Conservation Service

A product of the National Cooperative Soil Survey, a joint effort of the United States Department of Agriculture and other Federal agencies, State agencies including the Agricultural Experiment Stations, and local participants

Custom Soil Resource Report for

Kennebec County, Maine

Route 3 Solar Array Project

March 9, 2020

Preface

Soil surveys contain information that affects land use planning in survey areas. They highlight soil limitations that affect various land uses and provide information about the properties of the soils in the survey areas. Soil surveys are designed for many different users, including farmers, ranchers, foresters, agronomists, urban planners, community officials, engineers, developers, builders, and home buyers. Also, conservationists, teachers, students, and specialists in recreation, waste disposal, and pollution control can use the surveys to help them understand, protect, or enhance the environment.

Various land use regulations of Federal, State, and local governments may impose special restrictions on land use or land treatment. Soil surveys identify soil properties that are used in making various land use or land treatment decisions. The information is intended to help the land users identify and reduce the effects of soil limitations on various land uses. The landowner or user is responsible for identifying and complying with existing laws and regulations.

Although soil survey information can be used for general farm, local, and wider area planning, onsite investigation is needed to supplement this information in some cases. Examples include soil quality assessments (http://www.nrcs.usda.gov/wps/portal/nrcs/main/soils/health/) and certain conservation and engineering applications. For more detailed information, contact your local USDA Service Center (https://offices.sc.egov.usda.gov/locator/app?agency=nrcs) or your NRCS State Soil Scientist (http://www.nrcs.usda.gov/wps/portal/nrcs/detail/soils/contactus/?cid=nrcs142p2_053951).

Great differences in soil properties can occur within short distances. Some soils are seasonally wet or subject to flooding. Some are too unstable to be used as a foundation for buildings or roads. Clayey or wet soils are poorly suited to use as septic tank absorption fields. A high water table makes a soil poorly suited to basements or underground installations.

The National Cooperative Soil Survey is a joint effort of the United States Department of Agriculture and other Federal agencies, State agencies including the Agricultural Experiment Stations, and local agencies. The Natural Resources Conservation Service (NRCS) has leadership for the Federal part of the National Cooperative Soil Survey.

Information about soils is updated periodically. Updated information is available through the NRCS Web Soil Survey, the site for official soil survey information.

The U.S. Department of Agriculture (USDA) prohibits discrimination in all its programs and activities on the basis of race, color, national origin, age, disability, and where applicable, sex, marital status, familial status, parental status, religion, sexual orientation, genetic information, political beliefs, reprisal, or because all or a part of an individual's income is derived from any public assistance program. (Not all prohibited bases apply to all programs.) Persons with disabilities who require

alternative means for communication of program information (Braille, large print, audiotape, etc.) should contact USDA's TARGET Center at (202) 720-2600 (voice and TDD). To file a complaint of discrimination, write to USDA, Director, Office of Civil Rights, 1400 Independence Avenue, S.W., Washington, D.C. 20250-9410 or call (800) 795-3272 (voice) or (202) 720-6382 (TDD). USDA is an equal opportunity provider and employer.

Contents

Preface.....2
How Soil Surveys Are Made.....5
Soil Map.....8
Soil Map.....9
Legend.....10
Map Unit Legend.....11
Map Unit Descriptions.....11
Kennebec County, Maine.....13
PdB—Paxton-Charlton fine sandy loams, 3 to 8 percent slopes.....13
RcA—Ridgebury fine sandy loam.....15
WrB—Woodbridge fine sandy loam, 3 to 8 percent slopes.....16
WsB—Woodbridge very stony fine sandy loam, 3 to 8 percent slopes.....18
References.....21

How Soil Surveys Are Made

Soil surveys are made to provide information about the soils and miscellaneous areas in a specific area. They include a description of the soils and miscellaneous areas and their location on the landscape and tables that show soil properties and limitations affecting various uses. Soil scientists observed the steepness, length, and shape of the slopes; the general pattern of drainage; the kinds of crops and native plants; and the kinds of bedrock. They observed and described many soil profiles. A soil profile is the sequence of natural layers, or horizons, in a soil. The profile extends from the surface down into the unconsolidated material in which the soil formed or from the surface down to bedrock. The unconsolidated material is devoid of roots and other living organisms and has not been changed by other biological activity.

Currently, soils are mapped according to the boundaries of major land resource areas (MLRAs). MLRAs are geographically associated land resource units that share common characteristics related to physiography, geology, climate, water resources, soils, biological resources, and land uses (USDA, 2006). Soil survey areas typically consist of parts of one or more MLRA.

The soils and miscellaneous areas in a survey area occur in an orderly pattern that is related to the geology, landforms, relief, climate, and natural vegetation of the area. Each kind of soil and miscellaneous area is associated with a particular kind of landform or with a segment of the landform. By observing the soils and miscellaneous areas in the survey area and relating their position to specific segments of the landform, a soil scientist develops a concept, or model, of how they were formed. Thus, during mapping, this model enables the soil scientist to predict with a considerable degree of accuracy the kind of soil or miscellaneous area at a specific location on the landscape.

Commonly, individual soils on the landscape merge into one another as their characteristics gradually change. To construct an accurate soil map, however, soil scientists must determine the boundaries between the soils. They can observe only a limited number of soil profiles. Nevertheless, these observations, supplemented by an understanding of the soil-vegetation-landscape relationship, are sufficient to verify predictions of the kinds of soil in an area and to determine the boundaries.

Soil scientists recorded the characteristics of the soil profiles that they studied. They noted soil color, texture, size and shape of soil aggregates, kind and amount of rock fragments, distribution of plant roots, reaction, and other features that enable them to identify soils. After describing the soils in the survey area and determining their properties, the soil scientists assigned the soils to taxonomic classes (units). Taxonomic classes are concepts. Each taxonomic class has a set of soil characteristics with precisely defined limits. The classes are used as a basis for comparison to classify soils systematically. Soil taxonomy, the system of taxonomic classification used in the United States, is based mainly on the kind and character of soil properties and the arrangement of horizons within the profile. After the soil

scientists classified and named the soils in the survey area, they compared the individual soils with similar soils in the same taxonomic class in other areas so that they could confirm data and assemble additional data based on experience and research.

The objective of soil mapping is not to delineate pure map unit components; the objective is to separate the landscape into landforms or landform segments that have similar use and management requirements. Each map unit is defined by a unique combination of soil components and/or miscellaneous areas in predictable proportions. Some components may be highly contrasting to the other components of the map unit. The presence of minor components in a map unit in no way diminishes the usefulness or accuracy of the data. The delineation of such landforms and landform segments on the map provides sufficient information for the development of resource plans. If intensive use of small areas is planned, onsite investigation is needed to define and locate the soils and miscellaneous areas.

Soil scientists make many field observations in the process of producing a soil map. The frequency of observation is dependent upon several factors, including scale of mapping, intensity of mapping, design of map units, complexity of the landscape, and experience of the soil scientist. Observations are made to test and refine the soil-landscape model and predictions and to verify the classification of the soils at specific locations. Once the soil-landscape model is refined, a significantly smaller number of measurements of individual soil properties are made and recorded. These measurements may include field measurements, such as those for color, depth to bedrock, and texture, and laboratory measurements, such as those for content of sand, silt, clay, salt, and other components. Properties of each soil typically vary from one point to another across the landscape.

Observations for map unit components are aggregated to develop ranges of characteristics for the components. The aggregated values are presented. Direct measurements do not exist for every property presented for every map unit component. Values for some properties are estimated from combinations of other properties.

While a soil survey is in progress, samples of some of the soils in the area generally are collected for laboratory analyses and for engineering tests. Soil scientists interpret the data from these analyses and tests as well as the field-observed characteristics and the soil properties to determine the expected behavior of the soils under different uses. Interpretations for all of the soils are field tested through observation of the soils in different uses and under different levels of management. Some interpretations are modified to fit local conditions, and some new interpretations are developed to meet local needs. Data are assembled from other sources, such as research information, production records, and field experience of specialists. For example, data on crop yields under defined levels of management are assembled from farm records and from field or plot experiments on the same kinds of soil.

Predictions about soil behavior are based not only on soil properties but also on such variables as climate and biological activity. Soil conditions are predictable over long periods of time, but they are not predictable from year to year. For example, soil scientists can predict with a fairly high degree of accuracy that a given soil will have a high water table within certain depths in most years, but they cannot predict that a high water table will always be at a specific level in the soil on a specific date.

After soil scientists located and identified the significant natural bodies of soil in the survey area, they drew the boundaries of these bodies on aerial photographs and

identified each as a specific map unit. Aerial photographs show trees, buildings, fields, roads, and rivers, all of which help in locating boundaries accurately.

Soil Map

The soil map section includes the soil map for the defined area of interest, a list of soil map units on the map and extent of each map unit, and cartographic symbols displayed on the map. Also presented are various metadata about data used to produce the map, and a description of each soil map unit.

69° 31' 41" W
69° 31' 24" W
44° 24' 39" N
44° 24' 22" N
457950
458010
458070
458130
458190
458250
458310
4917630
4917570
4917510
4917450
4917390
4917330
4917270
4917210
4917150
3
PdB
PdB
WrB
WsB
WsB
RcA
Soil Map may not be valid at this scale.
Map Scale: 1:2,490 if printed on A portrait (8.5" x 11") sheet.
Meters
0
35
70
140
210
Feet
0
100
200
400
600
N
Map projection: Web Mercator Corner coordinates: WGS84 Edge tics: UTM Zone 19N WGS84

MAP LEGEND

Area of Interest (AOI)

- Area of Interest (AOI)

Soils

- Soil Map Unit Polygons
- Soil Map Unit Lines
- Soil Map Unit Points

Special Point Features

- Blowout
- Borrow Pit
- Clay Spot
- Closed Depression
- Gravel Pit
- Gravelly Spot
- Landfill
- Lava Flow
- Marsh or swamp
- Mine or Quarry
- Miscellaneous Water
- Perennial Water
- Rock Outcrop
- Saline Spot
- Sandy Spot
- Severely Eroded Spot
- Sinkhole
- Slide or Slip
- Sodic Spot
- Spoil Area
- Stony Spot
- Very Stony Spot
- Wet Spot
- Other
- Special Line Features

Water Features

- Streams and Canals

Transportation

- Rails
- Interstate Highways
- US Routes
- Major Roads
- Local Roads

Background

- Aerial Photography

MAP INFORMATION

The soil surveys that comprise your AOI were mapped at 1:20,000.

Warning: Soil Map may not be valid at this scale.

Enlargement of maps beyond the scale of mapping can cause misunderstanding of the detail of mapping and accuracy of soil line placement. The maps do not show the small areas of contrasting soils that could have been shown at a more detailed scale.

Please rely on the bar scale on each map sheet for map measurements.

Source of Map: Natural Resources Conservation Service
Web Soil Survey URL:
Coordinate System: Web Mercator (EPSG:3857)

Maps from the Web Soil Survey are based on the Web Mercator projection, which preserves direction and shape but distorts distance and area. A projection that preserves area, such as the Albers equal-area conic projection, should be used if more accurate calculations of distance or area are required.

This product is generated from the USDA-NRCS certified data as of the version date(s) listed below.

Soil Survey Area: Kennebec County, Maine
Survey Area Data: Version 18, Sep 16, 2019

Soil map units are labeled (as space allows) for map scales 1:50,000 or larger.

Date(s) aerial images were photographed: Dec 31, 2009—Nov 1, 2016

The orthophoto or other base map on which the soil lines were compiled and digitized probably differs from the background imagery displayed on these maps. As a result, some minor shifting of map unit boundaries may be evident.

Map Unit Legend

Map Unit Symbol	Map Unit Name	Acres in AOI	Percent of AOI
PdB	Paxton-Charlton fine sandy loams, 3 to 8 percent slopes	5.3	21.1%
RcA	Ridgebury fine sandy loam	0.0	0.0%
WrB	Woodbridge fine sandy loam, 3 to 8 percent slopes	19.7	78.2%
WsB	Woodbridge very stony fine sandy loam, 3 to 8 percent slopes	0.2	0.7%
Totals for Area of Interest		**25.2**	**100.0%**

Map Unit Descriptions

The map units delineated on the detailed soil maps in a soil survey represent the soils or miscellaneous areas in the survey area. The map unit descriptions, along with the maps, can be used to determine the composition and properties of a unit.

A map unit delineation on a soil map represents an area dominated by one or more major kinds of soil or miscellaneous areas. A map unit is identified and named according to the taxonomic classification of the dominant soils. Within a taxonomic class there are precisely defined limits for the properties of the soils. On the landscape, however, the soils are natural phenomena, and they have the characteristic variability of all natural phenomena. Thus, the range of some observed properties may extend beyond the limits defined for a taxonomic class. Areas of soils of a single taxonomic class rarely, if ever, can be mapped without including areas of other taxonomic classes. Consequently, every map unit is made up of the soils or miscellaneous areas for which it is named and some minor components that belong to taxonomic classes other than those of the major soils.

Most minor soils have properties similar to those of the dominant soil or soils in the map unit, and thus they do not affect use and management. These are called noncontrasting, or similar, components. They may or may not be mentioned in a particular map unit description. Other minor components, however, have properties and behavioral characteristics divergent enough to affect use or to require different management. These are called contrasting, or dissimilar, components. They generally are in small areas and could not be mapped separately because of the scale used. Some small areas of strongly contrasting soils or miscellaneous areas are identified by a special symbol on the maps. If included in the database for a given area, the contrasting minor components are identified in the map unit descriptions along with some characteristics of each. A few areas of minor components may not have been observed, and consequently they are not mentioned in the descriptions, especially where the pattern was so complex that it was impractical to make enough observations to identify all the soils and miscellaneous areas on the landscape.

The presence of minor components in a map unit in no way diminishes the usefulness or accuracy of the data. The objective of mapping is not to delineate pure taxonomic classes but rather to separate the landscape into landforms or landform segments that have similar use and management requirements. The delineation of such segments on the map provides sufficient information for the development of resource plans. If intensive use of small areas is planned, however, onsite investigation is needed to define and locate the soils and miscellaneous areas.

An identifying symbol precedes the map unit name in the map unit descriptions. Each description includes general facts about the unit and gives important soil properties and qualities.

Soils that have profiles that are almost alike make up a *soil series*. Except for differences in texture of the surface layer, all the soils of a series have major horizons that are similar in composition, thickness, and arrangement.

Soils of one series can differ in texture of the surface layer, slope, stoniness, salinity, degree of erosion, and other characteristics that affect their use. On the basis of such differences, a soil series is divided into *soil phases*. Most of the areas shown on the detailed soil maps are phases of soil series. The name of a soil phase commonly indicates a feature that affects use or management. For example, Alpha silt loam, 0 to 2 percent slopes, is a phase of the Alpha series.

Some map units are made up of two or more major soils or miscellaneous areas. These map units are complexes, associations, or undifferentiated groups.

A *complex* consists of two or more soils or miscellaneous areas in such an intricate pattern or in such small areas that they cannot be shown separately on the maps. The pattern and proportion of the soils or miscellaneous areas are somewhat similar in all areas. Alpha-Beta complex, 0 to 6 percent slopes, is an example.

An *association* is made up of two or more geographically associated soils or miscellaneous areas that are shown as one unit on the maps. Because of present or anticipated uses of the map units in the survey area, it was not considered practical or necessary to map the soils or miscellaneous areas separately. The pattern and relative proportion of the soils or miscellaneous areas are somewhat similar. Alpha-Beta association, 0 to 2 percent slopes, is an example.

An *undifferentiated group* is made up of two or more soils or miscellaneous areas that could be mapped individually but are mapped as one unit because similar interpretations can be made for use and management. The pattern and proportion of the soils or miscellaneous areas in a mapped area are not uniform. An area can be made up of only one of the major soils or miscellaneous areas, or it can be made up of all of them. Alpha and Beta soils, 0 to 2 percent slopes, is an example.

Some surveys include *miscellaneous areas*. Such areas have little or no soil material and support little or no vegetation. Rock outcrop is an example.

Kennebec County, Maine

PdB—Paxton-Charlton fine sandy loams, 3 to 8 percent slopes

Map Unit Setting

National map unit symbol: 9k0x
Elevation: 10 to 3,500 feet
Mean annual precipitation: 34 to 50 inches
Mean annual air temperature: 37 to 46 degrees F
Frost-free period: 60 to 160 days
Farmland classification: All areas are prime farmland

Map Unit Composition

Paxton and similar soils: 62 percent
Charlton and similar soils: 27 percent
Minor components: 11 percent
Estimates are based on observations, descriptions, and transects of the mapunit.

Description of Paxton

Setting

Landform: Till plains
Landform position (two-dimensional): Shoulder
Landform position (three-dimensional): Talf
Down-slope shape: Convex
Across-slope shape: Convex
Parent material: Coarse-loamy lodgment till derived from mica schist

Typical profile

H1 - 0 to 8 inches: fine sandy loam
H2 - 8 to 31 inches: gravelly fine sandy loam
H3 - 31 to 65 inches: fine sandy loam

Properties and qualities

Slope: 3 to 8 percent
Depth to restrictive feature: 18 to 40 inches to densic material
Natural drainage class: Well drained
Capacity of the most limiting layer to transmit water (Ksat): Moderately low to moderately high (0.06 to 0.60 in/hr)
Depth to water table: About 18 to 26 inches
Frequency of flooding: None
Frequency of ponding: None
Available water storage in profile: Low (about 4.4 inches)

Interpretive groups

Land capability classification (irrigated): None specified
Land capability classification (nonirrigated): 2e
Hydrologic Soil Group: C/D
Hydric soil rating: No

Description of Charlton

Setting

Landform: Till plains
Landform position (three-dimensional): Dip
Down-slope shape: Convex

Across-slope shape: Convex
Parent material: Coarse-loamy supraglacial meltout till derived from mica schist

Typical profile

H1 - 0 to 8 inches: fine sandy loam
H2 - 8 to 30 inches: gravelly fine sandy loam
H3 - 30 to 65 inches: gravelly fine sandy loam

Properties and qualities

Slope: 3 to 8 percent
Depth to restrictive feature: More than 80 inches
Natural drainage class: Well drained
Capacity of the most limiting layer to transmit water (Ksat): Moderately high to high (0.60 to 6.00 in/hr)
Depth to water table: More than 80 inches
Frequency of flooding: None
Frequency of ponding: None
Available water storage in profile: Moderate (about 6.2 inches)

Interpretive groups

Land capability classification (irrigated): None specified
Land capability classification (nonirrigated): 2e
Hydrologic Soil Group: B
Hydric soil rating: No

Minor Components

Woodbridge

Percent of map unit: 5 percent
Landform: Till plains
Landform position (two-dimensional): Summit
Landform position (three-dimensional): Talf
Down-slope shape: Convex
Across-slope shape: Linear
Hydric soil rating: No

Tunbridge

Percent of map unit: 2 percent
Landform: Till plains
Landform position (two-dimensional): Shoulder
Landform position (three-dimensional): Rise
Down-slope shape: Convex
Across-slope shape: Convex
Hydric soil rating: No

Hollis

Percent of map unit: 2 percent
Landform: Till plains
Landform position (two-dimensional): Summit
Landform position (three-dimensional): Rise
Down-slope shape: Convex
Across-slope shape: Convex
Hydric soil rating: No

Ridgebury

Percent of map unit: 1 percent
Landform: Till plains
Landform position (two-dimensional): Footslope

Landform position (three-dimensional): Dip
Down-slope shape: Linear
Across-slope shape: Concave
Hydric soil rating: Yes

Paxton, > 8% slopes
Percent of map unit: 1 percent
Landform: Till plains
Landform position (two-dimensional): Shoulder
Landform position (three-dimensional): Talf
Down-slope shape: Convex
Across-slope shape: Convex
Hydric soil rating: No

RcA—Ridgebury fine sandy loam

Map Unit Setting
National map unit symbol: 9k16
Elevation: 10 to 2,500 feet
Mean annual precipitation: 30 to 50 inches
Mean annual air temperature: 37 to 46 degrees F
Frost-free period: 70 to 160 days
Farmland classification: Not prime farmland

Map Unit Composition
Ridgebury and similar soils: 87 percent
Minor components: 13 percent
Estimates are based on observations, descriptions, and transects of the mapunit.

Description of Ridgebury

Setting
Landform: Till plains
Landform position (two-dimensional): Footslope
Landform position (three-dimensional): Dip
Down-slope shape: Linear
Across-slope shape: Concave
Parent material: Coarse-loamy lodgment till derived from mica schist

Typical profile
H1 - 0 to 8 inches: fine sandy loam
H2 - 8 to 14 inches: fine sandy loam
H3 - 14 to 65 inches: fine sandy loam

Properties and qualities
Slope: 0 to 3 percent
Depth to restrictive feature: 10 to 25 inches to densic material
Natural drainage class: Poorly drained
Capacity of the most limiting layer to transmit water (Ksat): Moderately low to moderately high (0.06 to 0.60 in/hr)

Depth to water table: About 0 to 12 inches
Frequency of flooding: None
Frequency of ponding: None
Available water storage in profile: Very low (about 3.0 inches)

Interpretive groups

Land capability classification (irrigated): None specified
Land capability classification (nonirrigated): 4w
Hydrologic Soil Group: C/D
Hydric soil rating: Yes

Minor Components

Peru

Percent of map unit: 5 percent
Landform: Till plains
Landform position (two-dimensional): Backslope
Landform position (three-dimensional): Rise
Down-slope shape: Convex
Across-slope shape: Linear
Hydric soil rating: No

Woodbridge

Percent of map unit: 5 percent
Landform: Till plains
Landform position (two-dimensional): Summit
Landform position (three-dimensional): Talf
Down-slope shape: Convex
Across-slope shape: Linear
Hydric soil rating: No

Peacham

Percent of map unit: 3 percent
Landform: Till plains
Landform position (two-dimensional): Footslope
Landform position (three-dimensional): Dip
Down-slope shape: Concave
Across-slope shape: Concave
Hydric soil rating: Yes

WrB—Woodbridge fine sandy loam, 3 to 8 percent slopes

Map Unit Setting

National map unit symbol: 9k1r
Elevation: 10 to 3,500 feet
Mean annual precipitation: 34 to 50 inches
Mean annual air temperature: 37 to 46 degrees F
Frost-free period: 60 to 160 days
Farmland classification: All areas are prime farmland

Map Unit Composition

Woodbridge and similar soils: 85 percent
Minor components: 15 percent
Estimates are based on observations, descriptions, and transects of the mapunit.

Description of Woodbridge

Setting

Landform: Till plains
Landform position (two-dimensional): Summit
Landform position (three-dimensional): Talf
Down-slope shape: Convex
Across-slope shape: Linear
Parent material: Coarse-loamy lodgment till derived from mica schist

Typical profile

H1 - 0 to 7 inches: fine sandy loam
H2 - 7 to 22 inches: fine sandy loam
H3 - 22 to 65 inches: fine sandy loam

Properties and qualities

Slope: 3 to 8 percent
Depth to restrictive feature: 18 to 30 inches to densic material
Natural drainage class: Moderately well drained
Capacity of the most limiting layer to transmit water (Ksat): Moderately low to moderately high (0.06 to 0.60 in/hr)
Depth to water table: About 16 to 24 inches
Frequency of flooding: None
Frequency of ponding: None
Available water storage in profile: Low (about 3.3 inches)

Interpretive groups

Land capability classification (irrigated): None specified
Land capability classification (nonirrigated): 2e
Hydrologic Soil Group: C/D
Hydric soil rating: No

Minor Components

Hollis

Percent of map unit: 3 percent
Landform: Till plains
Landform position (two-dimensional): Summit
Landform position (three-dimensional): Rise
Down-slope shape: Convex
Across-slope shape: Convex
Hydric soil rating: No

Tunbridge

Percent of map unit: 3 percent
Landform: Till plains
Landform position (two-dimensional): Shoulder
Landform position (three-dimensional): Rise
Down-slope shape: Convex
Across-slope shape: Convex
Hydric soil rating: No

Paxton

Percent of map unit: 3 percent
Landform: Till plains
Landform position (two-dimensional): Shoulder
Landform position (three-dimensional): Dip
Down-slope shape: Convex
Across-slope shape: Convex
Hydric soil rating: No

Ridgebury

Percent of map unit: 2 percent
Landform: Till plains
Landform position (two-dimensional): Footslope
Landform position (three-dimensional): Dip
Down-slope shape: Linear
Across-slope shape: Concave
Hydric soil rating: Yes

Charlton

Percent of map unit: 2 percent
Landform: Till plains
Landform position (three-dimensional): Dip
Down-slope shape: Convex
Across-slope shape: Convex
Hydric soil rating: No

Woodbridge, > 8% slopes

Percent of map unit: 2 percent
Landform: Till plains
Landform position (two-dimensional): Summit
Landform position (three-dimensional): Talf
Down-slope shape: Convex
Across-slope shape: Linear
Hydric soil rating: No

WsB—Woodbridge very stony fine sandy loam, 3 to 8 percent slopes

Map Unit Setting

National map unit symbol: 9k1t
Elevation: 10 to 3,500 feet
Mean annual precipitation: 34 to 50 inches
Mean annual air temperature: 37 to 46 degrees F
Frost-free period: 60 to 160 days
Farmland classification: Not prime farmland

Map Unit Composition

Woodbridge and similar soils: 87 percent
Minor components: 13 percent
Estimates are based on observations, descriptions, and transects of the mapunit.

Description of Woodbridge

Setting

Landform: Till plains
Landform position (two-dimensional): Summit
Landform position (three-dimensional): Talf
Down-slope shape: Convex
Across-slope shape: Linear
Parent material: Coarse-loamy lodgment till derived from mica schist

Typical profile

H1 - 0 to 7 inches: fine sandy loam
H2 - 7 to 22 inches: fine sandy loam
H3 - 22 to 65 inches: fine sandy loam

Properties and qualities

Slope: 3 to 8 percent
Percent of area covered with surface fragments: 1.6 percent
Depth to restrictive feature: 18 to 30 inches to densic material
Natural drainage class: Moderately well drained
Capacity of the most limiting layer to transmit water (Ksat): Moderately low to moderately high (0.06 to 0.60 in/hr)
Depth to water table: About 16 to 24 inches
Frequency of flooding: None
Frequency of ponding: None
Available water storage in profile: Low (about 3.3 inches)

Interpretive groups

Land capability classification (irrigated): None specified
Land capability classification (nonirrigated): 6s
Hydrologic Soil Group: C/D
Hydric soil rating: No

Minor Components

Paxton

Percent of map unit: 4 percent
Landform: Till plains
Landform position (two-dimensional): Shoulder
Landform position (three-dimensional): Dip
Down-slope shape: Convex
Across-slope shape: Convex
Hydric soil rating: No

Tunbridge

Percent of map unit: 3 percent
Landform: Till plains
Landform position (two-dimensional): Shoulder
Landform position (three-dimensional): Rise
Down-slope shape: Convex
Across-slope shape: Convex
Hydric soil rating: No

Charlton

Percent of map unit: 2 percent
Landform: Till plains
Landform position (three-dimensional): Dip

Down-slope shape: Convex
Across-slope shape: Convex
Hydric soil rating: No

Ridgebury

Percent of map unit: 1 percent
Landform: Till plains
Landform position (two-dimensional): Footslope
Landform position (three-dimensional): Dip
Down-slope shape: Linear
Across-slope shape: Concave
Hydric soil rating: Yes

Woodbridge, > 8% slopes

Percent of map unit: 1 percent
Landform: Till plains
Landform position (two-dimensional): Summit
Landform position (three-dimensional): Talf
Down-slope shape: Convex
Across-slope shape: Linear
Hydric soil rating: No

Hollis

Percent of map unit: 1 percent
Landform: Till plains
Landform position (two-dimensional): Summit
Landform position (three-dimensional): Rise
Down-slope shape: Convex
Across-slope shape: Convex
Hydric soil rating: No

Woodbridge, > 3% stone cover

Percent of map unit: 1 percent
Landform: Till plains
Landform position (two-dimensional): Summit
Landform position (three-dimensional): Talf
Down-slope shape: Convex
Across-slope shape: Linear
Hydric soil rating: No

References

American Association of State Highway and Transportation Officials (AASHTO). 2004. Standard specifications for transportation materials and methods of sampling and testing. 24th edition.

American Society for Testing and Materials (ASTM). 2005. Standard classification of soils for engineering purposes. ASTM Standard D2487-00.

Cowardin, L.M., V. Carter, F.C. Golet, and E.T. LaRoe. 1979. Classification of wetlands and deep-water habitats of the United States. U.S. Fish and Wildlife Service FWS/OBS-79/31.

Federal Register. July 13, 1994. Changes in hydric soils of the United States.

Federal Register. September 18, 2002. Hydric soils of the United States.

Hurt, G.W., and L.M. Vasilas, editors. Version 6.0, 2006. Field indicators of hydric soils in the United States.

National Research Council. 1995. Wetlands: Characteristics and boundaries.

Soil Survey Division Staff. 1993. Soil survey manual. Soil Conservation Service. U.S. Department of Agriculture Handbook 18. http://www.nrcs.usda.gov/wps/portal/nrcs/detail/national/soils/?cid=nrcs142p2_054262

Soil Survey Staff. 1999. Soil taxonomy: A basic system of soil classification for making and interpreting soil surveys. 2nd edition. Natural Resources Conservation Service, U.S. Department of Agriculture Handbook 436. http://www.nrcs.usda.gov/wps/portal/nrcs/detail/national/soils/?cid=nrcs142p2_053577

Soil Survey Staff. 2010. Keys to soil taxonomy. 11th edition. U.S. Department of Agriculture, Natural Resources Conservation Service. http://www.nrcs.usda.gov/wps/portal/nrcs/detail/national/soils/?cid=nrcs142p2_053580

Tiner, R.W., Jr. 1985. Wetlands of Delaware. U.S. Fish and Wildlife Service and Delaware Department of Natural Resources and Environmental Control, Wetlands Section.

United States Army Corps of Engineers, Environmental Laboratory. 1987. Corps of Engineers wetlands delineation manual. Waterways Experiment Station Technical Report Y-87-1.

United States Department of Agriculture, Natural Resources Conservation Service. National forestry manual. http://www.nrcs.usda.gov/wps/portal/nrcs/detail/soils/home/?cid=nrcs142p2_053374

United States Department of Agriculture, Natural Resources Conservation Service. National range and pasture handbook. http://www.nrcs.usda.gov/wps/portal/nrcs/detail/national/landuse/rangepasture/?cid=stelprdb1043084

United States Department of Agriculture, Natural Resources Conservation Service. National soil survey handbook, title 430-VI. http://www.nrcs.usda.gov/wps/portal/nrcs/detail/soils/scientists/?cid=nrcs142p2_054242

United States Department of Agriculture, Natural Resources Conservation Service. 2006. Land resource regions and major land resource areas of the United States, the Caribbean, and the Pacific Basin. U.S. Department of Agriculture Handbook 296. http://www.nrcs.usda.gov/wps/portal/nrcs/detail/national/soils/?cid=nrcs142p2_053624

United States Department of Agriculture, Soil Conservation Service. 1961. Land capability classification. U.S. Department of Agriculture Handbook 210. http://www.nrcs.usda.gov/Internet/FSE_DOCUMENTS/nrcs142p2_052290.pdf

Safety Data Sheet

1. Product and Company Identification

Important Note: As a solid, manufactured article, exposure to hazardous ingredients is not expected with normal use. This battery is an article pursuant to 29 CFR 1910.1200 and, as such, is not subject to the OSHA Hazard Communication Standard requirement. The information contained in this Safety Data Sheet contains valuable information critical to the safe handling and proper use of the product. This MSDS should be retained and available for employees and other users of this product.

Commercial product name
ELG(P11P35-11-N01,3.7L1200SPA)

Use of the substance/preparation
Lithium-ion batteries

Synonyms
Lithium-ion Cell, Lithium-ion Pack, Lithium-ion Battery, Li-Ion Cell, Li-Ion Pack, Li-Ion Battery

Manufacturer
SAMSUNG SDI Co., Ltd.

Address
HQ: 150-20, Gongse-ro, Giheung-gu, Yongin-si, Gyeonggi-do, Korea

Company/undertaking identification
Emergency Contact(Chemtrec)
1-800-424-9300: US and Canada / 1-703-527-3887: International

Further Information
Battery-System: Lithium-ion (Li-ion)
Nominal Voltage: 3.7 V
Rated Capacity: 1.2 Ah
Wh rating: 4.44 Wh
Anode (negative electrode): based on intercalation graphite
Cathode (positive electrode): based on lithiated metal oxide (Cobalt, Nickel, Manganese)

Remark:
The information and recommendations set forth are made in good faith and believed to be accurate as of the date of preparation. SAMSUNG SDI Co., Ltd. makes no warranty, expressed or implied, with respect to this information and disclaims all liabilities from reliance on it.

2. Hazards Identification

Classification of the substance or mixture.

Preparation Hazards and Classification: The product is a Lithium ion cell or battery and is therefore classified as an article and is not hazardous when used according to the recommendations of the manufacturer. The hazard is associated with the contents of the cell or battery. Under recommended use conditions, the electrode materials and liquid electrolyte are non-reactive provided that the cell or battery integrity remains and the seals remain intact. The potential for exposure should not exist unless the cell or battery leaks, is exposed to high temperatures or is mechanically, electrically or physically abused/damaged. If the cell or battery is compromised and starts to leak, based upon the battery ingredients, the contents are classified as Hazardous.

Hazard Summary
Physical hazards: Not classified for physical hazards.
Health hazards: Not classified for health hazards.
Environmental hazards: Not classified for hazards to the environment.
Specific hazards: Exposure to contents of an open or damaged cell or battery: contact with this material will cause burns to the skin, eyes and mucous membranes. May cause sensitization by skin contact.
Main Symptoms: Symptoms include itching, burning, redness and tearing.

Hazardous Materials Information Label (HMIS)
Health: 0
Flammability: 1
Physical Hazard: 0

NFPA Hazard Ratings
Health: 0
Flammability: 1
Reactivity: 0
Unique Hazard:

GHS precautionary statements

Precautionary Statement(s) Prevention	P102: Keep out of reach of children. P103: Read label prior to use. P202: Do not handle until all safety precautions have been read and understood. P210: Keep away from heat/sparks/open flames/hot surfaces – No smoking. P234: Keep only in original container. P254: Wash hands thoroughly after handling.
Response (If cell/battery leaks)	P260: Do not breathe vapor or spray. P280: Wear protective gloves/protective clothing/eye protection/face protection. P301/330/331: IF SWALLOWED: Rinse mouth. DO NOT induce vomiting. P303/361/353: IF ON SKIN (or hair): Remove/Take off immediately all contaminated clothing. Rinse skin with water/shower. P304/340: If INHALED: Remove victim to fresh air and keep at rest in a position comfortable for breathing. P305/351/338: IF IN EYES: Rinse cautiously with water for several minutes. Remove contact lenses, if present and easy to do. Continue rinsing. P310: Immediately call a POISON CENTER or doctor/physician. P363: Wash contaminated clothing before reuse. P370: In case of fire: Use carbon dioxide, dry chemical or water extinguisher.
Storage (Store as indicated in Section 7)	P402: Store in a dry place. P405: Store locked up. P410: Protect from sunlight.
Disposal	P406: Store any spilled/leaking electrolyte material in a corrosive resistant container with a resistant inner liner. P501: Dispose of batteries in accordance with applicable hazardous waste regulations.

Other Hazards.

Appearance, Color and Odor: Solid object with no odor.

Primary Routes(s) of Exposure: These chemicals are contained in a sealed enclosure. Risk of exposure occurs only if the cell or pack is mechanically, thermally, electrically or physically abused to the point of compromising the enclosure.
If this occurs, exposure to the electrolyte solution contained within can occur by inhalation, ingestion, eye contact and skin contact.

Potential Health Effect(s):

Acute (short term): see Section 8 for exposure controls.
In the event that this cell or pack has been ruptured, the electrolyte solution contained within the cell would be corrosive and can cause burns to skin and eyes.
Inhalation: Inhalation of materials from a sealed cell is not an expected route of exposure. Vapors or mists from a ruptured cell may cause respiratory irritation.
Ingestion: Swallowing of materials from a sealed cell is not an expected route of exposure. Swallowing the contents of an open cell can cause serious chemical burns to mouth, esophagus, and gastrointestinal tract.
Skin: Contact between the cell and skin will not cause any harm. Skin contact with the contents of an open cell can cause severe irritation or burns to the skin.
Eye: Contact between the cell and the eye will not cause any harm. Eye contact with the contents of an open cell can cause severe irritation or burns to the eye.
CHRONIC (long term): see Section 11 for additional toxicological data.

Interactions with other chemicals: Immersion in high conductivity liquids may cause corrosion and breaching of the cell or battery enclosure. The electrolyte solution inside of the cells may react with alkaline (basic) materials and present a flammability hazard.

Potential Environmental Effects: Not Available.

3. Composition/information on ingredients

Hazardous components

	Chemical Name	CAS No.	*Mass range in cell (g/g %)
Electrolyte	Contains Electrolyte salt and solvents.		5-20
Electrolyte salt	Lithium hexafluorophosphate	21324-40-3	0.05-5
Electrolyte solvent	Includes one or more of the following; Ethelyne Carbonate Propylene Carbonate Diethyl Carbonate	96-49-1 108-32-7 105-58-8	5-20
PVDF	Polyvinylidenfluoride	24937-79-9	<1
Copper	Cu	7440-50-8	3-15
Aluminium	Al	7429-90-5	2-10
Cathode	Lithium cobalt oxide	12190-79-3	20-50
Anode	Graphite	7782-42-5	10-30
Steel, Nickel, and inert components		Various	Balance

Because of the cell structure the dangerous ingredients will not be available if used properly.
During charge process a lithium graphite intercalation phase is formed.

4. First Aid Measures

Description of first aid measures
The hazardous components of this cell or battery are contained within a sealed unit. The following measures are only applicable if exposure has occurred to components when a cell or battery leaks, is exposed to high temperatures or is mechanically, electrically or physically abused/damaged. The hazardous contents are caustic alkaline electrolytes contained in cells with lithium metal oxide cathodes, graphite and carbon anodes and Polyvinylidenfluoride binders.

Ingestion: Have victim rinse mouth thoroughly with water. DO NOT INDUCE VOMITING. Quickly transport victim to an emergency care facility.
EYE: If eye contact with contents of an open cell occurs, immediately flush the contaminated eye(s) with water. Quickly transport victim to an emergency care facility.
Skin Contact: Immediately flush with water. If irritation or pain persists, seek medical attention.
Inhalation: Remove the patient from exposure into fresh air, seek medical attention.

PROTECTION FOR FIRST
AIDERS: Do not enter corrosive vapor contaminated areas without a respirator or Self Contained Breathing Apparatus. Wear adequate personal protective equipment as indicated in Section 8.
FIRST AID FACILITIES: Eye wash bottle, fountain, safety showers or at least a source of running water are required in the area where the product is used.

Most important symptoms & effects, acute & delayed, caused by exposure:

ACUTE: The contents of the battery are rated as corrosive. Ingestion of the electrolyte could lead to severe gastrointestinal tract irritation with nausea, vomiting and potentially burns. Inhalation of vapors may lead to severe irritation of the mouth and upper respiratory tract with a burning sensation, pain, burns and inflammation in the nose and throat; there may also be coughing or difficulty breathing. Eye contact may lead to severe eye irritation or in worst case scenario irreversible damage and possible eye burns. Skin contact may lead to irritation and possible skin burns.
CHRONIC: Skin contact may aggravate/exacerbate existing skin conditions, such as dermatitis. Chronic inhalation may lead to the same symptoms as listed for acute inhalation above.

Indication of any immediate medical attention and special treatment needed
ADVICE TO DOCTOR: Treat symptomatically if the person comes into contact with the corrosive electrolyte liquid contents of a damaged battery.

5. Fire Fighting Measures

Suitable extinguishing media
Cold water and dry powder in large amount are applicable.
Use metal fire extinction powder or dry sand if only few cells are involved.

Special hazards arising from the chemical
May form hydrofluoric acid if electrolyte comes into contact with water.
In case of fire, the formation of the following flue gases cannot be excluded:
Hydrogen fluoride (HF), Carbon monoxide and carbon dioxide.

Protective equipment and precautions for firefighters
Wear self-contained breathing apparatus and protective suit.

Additional information
If possible, remove cell(s) from fire fighting area. If heated above 125°C, cell(s) can explode/vent. Cell is

not flammable but internal organic material will burn if the cell is incinerated.

6. Accidental Release Measures

Personal precautions, protective equipment and emergency procedures:

As an immediate precautionary measure, isolate spill or leak area for at least 25 meters (75 feet) in all directions. Keep unauthorized personnel away. Stay upwind. Keep out of low areas. Ventilate closed areas before entering. Wear adequate personal protective equipment as indicated in Section 8.

Environmental precautions

Absorb spilled material with non-reactive absorbent such as vermiculite, clay or earth. Prevent from migration into soil, sewers and natural waterways – inform local authorities if this occurs.

Methods and material for containment and cleaning up

Evacuate spill area immediately and remove sources of ignition. Do NOT touch spilled material. Cleanup personnel must be trained in the safe handling of this product. Spills may be absorbed on non-reactive absorbents such as vermiculite. Place cells or batteries into individual plastic bags and then place into appropriate containers and close tightly for disposal. Ensure that cleanup procedures do not expose spilled material to any moisture. Immediately transport closed containers outside. Lined steel drums are suitable for storage of damaged cells or batteries until proper disposal can be arranged.

7. Handling and Storage

Precaution for Handling

Avoid short circuiting the cell. Avoid mechanical damage of the cell. Do not open or disassemble.
Advice on protection against fire and explosion
Keep away from open flames, hot surfaces and sources of ignition.

Condition for storage

Storage at room temperature (approx. 20°C) at approx. 20~60% of the nominal capacity
(OCV approx. 3.6 - 3.9 V/cell).
Keep in closed original container.

8. Exposure controls/personal protection Exposure limit values Exposure limits

Exposure Control Measures

Exposure Limit Values: Airborne exposures to hazardous substances are not expected when the cells or batteries are used for their intended purposes. Exposure standards are not applicable to the sealed articles.
Biological Monitoring: Not applicable.
Control Banding: Not applicable.
Recommended monitoring procedures: Follow standard monitoring procedures.
Derived no-effect level (DNEL): Not applicable.
Derived minimal effect level (DMEL): Not applicable.
Predicted no-effect concentrations (PNECs): Not applicable.

Engineering Controls

Engineering Controls: Special ventilation is not required when using these products in normal use scenarios.Ventilation is required if there is leakage from the cell or battery.
Individual Protection Measures

Eye and Face protection: Eye protection is not required when handling cells or batteries during normal use.Wear safety glasses/goggles if handling a leaking or ruptured cell or battery.
Skin (Hand) protection: Hand protection is not required when handling the cell or battery during normal

use.PVC gloves are recommended when dealing with a leaking or ruptured cell or battery.
Skin (clothing) protection: Skin protection is not required when handling the cell or battery during normal use. Wear long sleeved clothing to avoid skin contact if handling a leaking or ruptured cell or battery. Soiled clothing should be washed with detergent prior to re-use.
Respiratory protection: During routine operation, a respirator is not required. However, if dealing with an electrolyte leakage and irritating vapors are generated, an approved half face inorganic vapor and gas/acid/particulate respirator is required.
Thermal Protection: Not applicable.
Other Protective Equipment: Have a safety shower or eye wash station readily available

.

Hygiene Measures: Do not eat, drink or smoke in work areas. Avoid storing food, drink or tobacco near the product. Practice and maintain good housekeeping.

Environmental exposure controls: Avoid release to the environment.

9. Physical and Chemical Properties

Appearance

physical state,:	Solid
Color:	Various
Odor:	Odorless

Important health, safety and environmental information

Test method	
pHValue:	n.a.
Flash point:	n.a
Lower explosion limits:	n.a.
Vapour pressure:	n.a.
Density:	n.a.
Water solubility:	Insoluble
Ignition temperature:	n.a.

10. Stability and Reactivity

Stability
Stable

Conditions to avoid
Keep away from open flames, hot surfaces and sources of ignition. Do not puncture, crush or incinerate.

Materials to avoid
No materials to be especially mentioned.

Hazardous decomposition products
In case of open cells, there is the possibility of hydrofluoric acid and carbon monoxide release.

Possibility of Hazardous Reactions
Will not occur

Additional information

No decomposition if stored and applied as directed.

11. Toxicological Information

Information on toxicological effects:
The hazardous components of the cell or battery are contained within a sealed unit. Under recommended use conditions, the electrode materials and liquid electrolyte are non-reactive provided that the cell or battery integrity remains and the seals remain intact. The potential for exposure should not exist unless the battery leaks, is exposed to high temperature or is mechanically, electrically or physically abused/damaged. **The following toxicology data is in respect to if a person comes into contact with the electrolyte.**

Acute Toxicity:
Swallowed: The electrolyte contained within the cell or battery is a corrosive liquid. Ingestion of this electrolyte would be harmful. Swallowing may result in nausea, vomiting, diarrhea, abdominal pain and chemical burns to the gastrointestinal tract. During normal usage ingestion should not be a means of exposure.
Eye: The electrolyte contained within the cell or battery is a corrosive liquid and it is expected that it would cause irreversible damage to the eyes. Contact may cause corneal burns. Effects may be slow to heal after eye contact. Correct handling procedures incorporating appropriate eye protection should minimize the risk of eye irritation.
Skin: The electrolyte contained within the cell or battery is a corrosive liquid and it is expected that it would cause skin burns or severe irritation to the skin if not washed off immediately. Correct handling procedures should minimize the risk of skin irritation. People with pre-existing skin conditions, such as dermatitis, should take extreme care so as not to exacerbate the condition.
Inhaled: Inhalation of vapors from a leaking cell or battery is expected to cause severe irritation of the mouth and upper respiratory tract with a burning sensation, pain, burns and inflammation in the nose and throat; there may also be coughing or difficulty breathing.

Skin Corrosion/Irritation: The electrolyte contained within the cell or battery is classified as a corrosive liquid and is expected to exhibit Dermal Corrosivity/Irritation.

Serious Eye Damage/Irritation: The electrolyte contained within the cell or battery is classified as a corrosive liquid and is expected to exhibit serious Damage/Corrosivity.

Respiratory or Skin Sensitization: The electrolyte contained within the cell or battery is not expected to be a skin sensitizer according to OECD test 406, based on the available data and the known hazards of the components. The electrolyte contained within the battery is not expected to be a respiratory tract sensitizer, based on the available data and the known hazards of the components.

Germ Cell Mutagenicity: The electrolyte contained within the cell or battery is not expected to be mutagenic according to test such as OECD tests 471, 475, 476, 478 and 479, based on the available data and the known hazards of the components.

Carcinogenicity: Th electrolyte contained within the cell or battery is not expected to be a carcinogen. The cathode contains Cobalt and Nickel components. These components are classified as IARC 2B – possibly carcinogenic to humans, however they do not pose a threat when contained in the cell or battery sealed unit.

Reproductive Toxicity: The electrolyte contained within the cell or battery is not expected to be a reproductive hazard according to test such as OECD tests 414 and 421, based on the available data and the known hazards of the components.

Specific Target Organ Toxicity (STOT) – Single Exposure: The electrolyte contained within the cell or battery is corrosive and is expect to cause respiratory irritation by inhalation. Inhalation of vapors may lead to severe irritation of the mouth and upper respiratory tract with a burning sensation, pain, burns and inflammation in the nose and throat; there may also be coughing or difficulty breathing.

Specific Target Organ Toxicity (STOT) – Repeated Exposure: The cells or batteries are not expected to cause organ damage from prolonged or repeated exposure according to tests such as OECD tests 410 and 412, based on the available data and the known hazards of the components.

Aspiration Hazard: The cells or batteries are not classified as an aspiration hazard, based on the available data and the known hazards of the components. However, due to the corrosive nature of the product if swallowed, do NOT induce vomiting. If vomiting has occurred after ingestion the person should be observed to ensure that aspiration into the lungs has not occurred and assessed for chemical burns to the gastrointestinal and respiratory tracts.

12. Ecological Information

Further information

Ecological injuries are not known or expected under normal use. Do not flush into surface water or sanitary sewer system.

13. Disposal Considerations

Advice on disposal

For recycling consult manufacturer.

Contaminated packaging

Disposal in accordance with local regulations.

14. Transport Information

With regard to transport, the following regulations are cited and considered:

- UN No. 3480
- UN proper shipping name: Lithium Ion Batteries.
- Transport hazard class : 9
- The International Civil Aviation Organization (ICAO) Technical Instructions, Packing Instruction 965, Section ⅠB or Ⅱ
- The International Air Transport Association (IATA) Dangerous Goods Regulations, Packing Instruction 965, Section ⅠB or Ⅱ
- The International Maritime Dangerous Goods (IMDG) Code [Special provision 188, 230]
- US Hazardous Materials Regulations 49 CFR(Code of Federal Regulations) Sections 173.185 Lithium batteries and cells,
- The UN Recommendations on the Transport of Dangerous Goods, Manual of Tests and Criteria 38.3 Lithium batteries, Revision 3, Amendment 1 or any subsequent revision and amendment applicable at the date of the type

If those lithium-ion batteries are packed with or contained in an equipment, then it is the responsibility of the shipper to ensure that the consignment are packed in compliance to the latest edition of the IATA Dangerous Goods Regulations section Ⅱ of either Packing Instruction 966 or 967 in order for that consignment to be declared as NOT RESTRICTED (non-hazardous/non-Dangerous). If those lithium-ion batteries are packed with or contained in an equipment, UN No. is UN3481

Our products are properly classified, described, packaged, marked, and labeled, and are in proper condition for transportation according to all the applicable international and national governmental regulations, not limited to the above mentioned. We further certify that the enclosed products have been tested and fulfilled the requirements and conditions in accordance with UN Recommendations (T1 – T8) on the Transport of Dangerous Goods Model Regulations and the Manual of Testes and Criteria.

Test results of the UN Recommendation on the Transport of Dangerous Goods

Manual of Test and Criteria (38.3 Lithium batteries)		**Test Results**	**Remark**
No	Test item		
T1	Altitude Simulation	Pass	
T2	Thermal Test	Pass	
T3	Vibration	Pass	

T4	Shock	Pass	
T5	External Short Circuit	Pass	
T6	Impact/Crush	Pass	
T7	Overcharge	Pass	For pack and single cell battery only
T8	Forced Discharge	Pass	

15. Regulatory Information

Canadian Federal Regulations:

These products have been classified in accordance with the hazard criteria of the Controlled Products Regulations and the SDS contains all the information required by the Controlled Products Regulations.
WHMIS Classification: Not Controlled, manufactured article.
New Substance Notification Regulations: Lithium hexafluorophosphate is listed on the Non-Domestic Substance List (NDSL). All other ingredients in the product are listed, as required, on Canada's Domestic Substances List (DSL).
National Pollutant Release Inventory (NPRI) Substances: These products do not contain any NPRI chemicals.

United States Federal and State Regulations:

TSCA Status: All ingredients in these products are listed on the TSCA inventory.
OSHA: These products do not meet criteria as per Part 1910.1200, manufactured article.
SARA EPA Title III: None.
Sec. 302/304: None.
Sec. 311/312: None.
Sec. 313: None.
CERCLA RQ: None.

Australia and New Zealand

SUSMP: Not applicable
AICS: All ingredients are on the AICS list.
HSNO Approval number: Not applicable
HSNO Group Title: Not applicable
NOHSC:10008 Risk Phrases: R34 - Causes Burns.
NOHSC:1008 Safety Phrases:
S1 – Keep locked up.
S2 – Keep out of reach of children.
S23 – Do not breathe vapor.
S24/25 – Avoid contact with skin and eyes.
S26 – In case of contact with eyes, rinse immediately with plenty of water and seek medical advice.
S27/28 – After contact with skin, take off immediately all contaminated clothing and wash immediately with plenty of water.
S36/37/39 – Wear suitable protective clothing, gloves and eye/face protection.
S56 – Dispose of this material and its container at hazardous waste or special waste collection point.
S62 – If swallowed, DO NOT induce vomiting: seek medical advice immediately and show this container or label.
S64 – If swallowed, rinse mouth with water (Only if the person is conscious).

EC Classification for the Substance/Preparation:

These products are not classified as hazardous according to Regulation (EC) No. 1272/2008.
Keep out of the reach of children.

EU Restrictions on use:

Regulation (EC) No. 1907/2006, REACH Annex XVII Substances subject to restriction on marketing and use as amended: Aluminium (CAS 7429-90-5)

Other EU Regulations

This Safety Data Sheet complies with the requirements of Regulation (EC) No. 1907/2006.

Japanese Regulations

Japanese Industrial Standards (JIS) JIS Z 7253:2012
Waste disposal and public cleaning law
Law for Promotion of Effective Utilization of Resources

Taiwanese Regulations

Regulation of Labelling and Hazard Communication of Dangerous and Harmful Materials: Labeling requirements and other relevant provision of chemicals, this product is not classified as dangerous goods.
Toxic Chemicals Substance Control Law: Not Listed.
CNS 1030016 Safety of primary and secondary lithium cells and batteries during transport.

Chinese Regulations

General Rule for Classification and Hazard Communication of Chemicals (GB 13690-2009): Specifies the classification, labeling and hazard communication of chemicals in compliance with the GHS standard for chemical production sites and labeling of consumer goods.
General Rule for Preparation of Precautionary Labels for Chemicals (GB 15258-2009): Specifies the relevant application methods of precautionary labels for chemicals.
Safety Data Sheet for Chemical Products Content and Order of Sections (GB/T 16483-2008)

16. Other Information

Further Information

Data of sections 4 to 8, as well as 10 to 12, do not necessarily refer to the use and the regular handling of the product (in this sense consult package leaflet and expert information), but to release of major amounts in case of accidents and irregularities. The information describes exclusively the safety requirements for the product (s) and is based on the present level of our knowledge. This data does not constitute a uarantee for the characteristics of the product(s) as defined by the legal warranty regulations. "(n.a. = not applicable; n.d. = not determined)"
The data for the hazardous ingredients were taken respectively from the last version of the sub-contractor's safety data sheet.

Safety Data Sheet
acc. to ISO and GHS

Printing date: 03.04.2014 **Reviewed on:** 03.04.2014

1 Identification

Product identifier

Trade name: **ENVIROTEMP™ FR3™ Fluid**
SAP Material Numbers: 100088941; 100089128; 100089127; 100089129
CAS Number: 8001-22-7

Application of the substance / the mixture: Dielectric coolant

Details of the supplier of the Safety Data Sheet
Manufacturer/Supplier:
Cargill, Incorporated
Cargill Industrial Specialties
9320 Excelsior Blvd.
Hopkins, Minnesota 55343
Tel: 1-952-984-9122
E-mail: CIS_CustomerService@Cargill.com

Emergency telephone number: 1-800-255-3924 (ChemTel)

2 Hazard(s) identification

Classification of the substance or mixture:
The product is not classified as hazardous according to the Globally Harmonized System (GHS).

Label elements
GHS label elements: Not Regulated.
Hazard pictograms: Not Regulated.
Signal word: Not Regulated.
Hazard-determining components of labeling: None.
Hazard statements: Not Regulated.

Hazard description
WHMIS-symbols: Not hazardous under WHMIS.

Classification system:
NFPA ratings (scale 0 - 4)

Health = 0
Fire = 1
Reactivity = 0

HMIS ratings (scale 0 - 4)

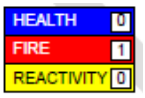

Health = 0
Fire = 1
Reactivity = 0

Other hazards
Results of PBT and vPvB assessment
PBT: Not applicable.
vPvB: Not applicable.

3 Composition/information on ingredients

Chemical characterization: Mixture.
CAS No.: 8001-22-7
Description: Soybean Oil with nonhazardous additives.
Hazardous components: None.

Created by Global Safety Management, Inc. -Tel: 1-813-435-5161 - www.globalsafetynet.com

Printing date: 03.04.2014 **Reviewed on:** 03.04.2014

Trade name: ENVIROTEMP™ FR3™ Fluid

4 First-aid measures

Description of first aid measures

General information:
No special measures required.

After inhalation:
Supply fresh air; consult doctor in case of complaints.

After skin contact:
Generally the product does not irritate the skin.
Clean with water and soap.
If skin irritation continues, consult a doctor.

After eye contact:
Remove contact lenses if worn.
Rinse opened eye for several minutes under running water. If symptoms persist, consult a doctor.

After swallowing:
Rinse out mouth and then drink plenty of water.
Do not induce vomiting; immediately call for medical help.

Most important symptoms and effects, both acute and delayed:
Gastric or intestinal distress when ingested.

Danger: None

Indication of any immediate medical attention and special treatment needed:
No additional information.

5 Fire-fighting measures

Extinguishing media

Suitable extinguishing agents:
Foam.
Fire-extinguishing powder.
Carbon dioxide.
Gaseous extinguishing agents.

For safety reasons unsuitable extinguishing agents: Water

Special hazards arising from the substance or mixture:
In case of fire, the following can be released: Carbon monoxide (CO)

Advice for firefighters

Protective equipment:
Wear self-contained respiratory protective device.
Wear fully protective suit.

Additional information: No additional information.

6 Accidental release measures

Personal precautions, protective equipment and emergency procedures:
Particular danger of slipping on leaked/spilled product.
Wear protective equipment.

Environmental precautions: Do not allow to enter sewers/ surface or ground water.

Printing date: 03.04.2014 **Reviewed on:** 03.04.2014

Trade name: ENVIROTEMP™ FR3™ Fluid

Methods and material for containment and cleaning up:
Send for suitable recovery and/or disposal authorities.
Contain and control the leaks or spills with non-combustible absorbent materials such as sand, earth, vermiculite, or diatomaceous earth in drums for waste disposal.
Clay materials (Fuller's earth, oil dry products) saturated with Envirotemp FR3 fluid can, under certain conditions, undergo a slow oxidation that releases heat. If the heat so released cannot escape, it is possible that the temperature may increase.
Reference to other sections:
See Section 7 for information on safe handling.
See Section 8 for information on personal protection equipment.
See Section 13 for disposal information.

7 Handling and storage

Precautions for safe handling: None
Information about protection against explosions and fires: No special measures required.

Conditions for safe storage, including any incompatibilities
Storage
Requirements to be met by storerooms and receptacles:
Avoid storage near extreme heat, ignition sources or open flame.
Protect from humidity and water.
Information about storage in one common storage facility: Store away from oxidizing agents.
Further information about storage conditions: Store in cool, dry conditions in well sealed receptacles.
Specific end use(s): No additional information.

8 Exposure controls/personal protection

Additional information about design of technical systems: No additional information.
Control parameters
Components with limit values that require monitoring at the workplace: Not required.
Additional information: The lists that were valid during the creation were used as basis.

Exposure controls
Personal protective equipment:
General protective and hygienic measures: No additional information.
Breathing equipment:
Not required under normal conditions of use.
Protection of hands:
Wash hands after use. For extended skin contact, gloves are recommended.

Protective gloves

The glove material has to be impermeable and resistant to the product. Selection of the glove material should be based on the penetration time, rates of diffusion and the degradation of the glove material. Wear protective gloves to handle contents of damaged or leaking units.
Material of gloves:
The selection of a suitable gloves does not only depend on the material, but also on the quality, and varies from manufacturer to manufacturer.
Penetration time of glove material:
The exact break through time has to be determined by the manufacturer of the protective gloves. DO NOT exceed the breakthrough time set by the Manufacturer.

Printing date: 03.04.2014 **Reviewed on:** 03.04.2014

Trade name: ENVIROTEMP™ FR3™ Fluid

Eye protection:

Safety glasses

Body protection:
Protective work clothing may be required for spills.
Not required under normal conditions of use.

Limitation and supervision of exposure into the environment: No special requirements.

9 Physical and chemical properties

Information on basic physical and chemical properties

General Information	
Appearance	
Form:	Liquid
Color:	Light green
Odor:	Slight
Odor threshold:	Not determined.
pH-value:	Not applicable.
Change in condition	
Melting point/Melting range:	Not determined.
Boiling point/Boiling range:	>360 °C / >680 °F /
Flash point:	>240 °C / >464 °F / (Closed Cup)
Flammability (solid, gaseous):	Not applicable.
Ignition temperature:	Not applicable.
Decomposition temperature:	Not determined.
Autoignition:	401 - 404°C (ASTM E659)
Danger of explosion:	Product does not present an explosion hazard.
Explosion limits	
Lower:	Not determined.
Upper:	Not determined.
Oxidizing properties:	Non-oxidizing.

Printing date: 03.04.2014 **Reviewed on:** 03.04.2014

Trade name: ENVIROTEMP™ FR3™ Fluid

Vapor pressure at 20 °C (68 °F):	< 1.3 Pa (< 0.01 mm Hg)
Density at 20 °C (68 °F):	0.92 g/cm³ (7.677 lbs/gal)
Relative density at 20 °C (68 °F):	Not applicable
Vapor density:	Not determined.
Evaporation rate:	Nil.
Solubility in / Miscibility with Water:	Insoluble.
Partition coefficient (n-octanol/water):	Not determined.
Viscosity	
Dynamic:	Not determined.
Kinematic at 40 °C (104 °F):	33 - 35 mm²/s
Other information:	No additional information.

10 Stability and reactivity

Reactivity
Chemical stability
Thermal decomposition / conditions to be avoided:
To avoid thermal decomposition, avoid temperatures > 250C.
Possibility of hazardous reactions:
Reacts with strong oxidizing agents.
Reacts with strong alkali.
Conditions to avoid: Store away from oxidizing agents.
Incompatible materials: No additional information.
Hazardous decomposition products: None.

11 Toxicological information

Information on toxicological effects
Acute toxicity: Not acutely toxic (OECD 420)

Primary irritant effect
On the skin: No irritant effect.
On the eye: No irritating effect.
Sensitization: No sensitizing effects known.
Additional toxicological information:
When used and handled according to specifications, the product does not have any harmful effects according to our experience and the information provided to us.
The substance is not subject to classification.

Printing date: 03.04.2014 **Reviewed on:** 03.04.2014

Trade name: ENVIROTEMP™ FR3™ Fluid

Carcinogenic categories

NTP (National Toxicology Program):
None of the ingredients are listed.

Repeated Dose Toxicity: None.

12 Ecological information

Toxicity

Aquatic toxicity: No Observable Adverse Effect > 10 000 mg/L (ASTM D608, OECD 203).
Oral toxicity: No Observable Adverse Effect > 2 000 mg/kg (OECD 420).
Persistence and degradability: Readily biodegradable.
Bioaccumulative potential: No potential for bioaccumulation.
Mobility in soil: Product has low mobility in soil.
Additional ecological information

Results of PBT and vPvB assessment

PBT: Not applicable.
vPvB: Not applicable.
Other adverse effects: No additional information.

13 Disposal considerations

Waste treatment methods

Recommendation:
Product and packaging must be disposed of in accordance with relevant national and local regulations. May be incinerated. Unopened product may be returned for reclamation.

Uncleaned packagings:

Recommendation: Disposal must be made according to the applicable regulations.
Recommended cleansing agent: Water. Use cleansing agents, if necessary.

14 Transport information

UN-Number	
DOT, ADR, ADN, IMDG, IATA:	Not Regulated
UN proper shipping name	
DOT, ADR, ADN, IMDG, IATA:	Not Regulated

Printing date: 03.04.2014 **Reviewed on:** 03.04.2014

Trade name: ENVIROTEMP™ FR3™ Fluid

Transport hazard class(es)	
DOT, ADR, ADN, IMDG, IATA Class:	Not applicable
Packing group DOT, ADR, IMDG, IATA:	Not applicable
Environmental hazards: Marine pollutant:	No
Special precautions for user:	Not applicable.
Transport in bulk according to Annex II of MARPOL73/78 and the IBC Code:	Not applicable.
UN "Model Regulation":	-

15 Regulatory information

Safety, health and environmental regulations/legislation specific for the substance or mixture.

SARA

Section 355 (extremely hazardous substances):
None of the ingredient is listed.

Section 313 (Specific toxic chemical listings):
None of the ingredient is listed.

TSCA (Toxic Substances Control Act):
All ingredients are listed.

Proposition 65 (California)

Chemicals known to cause cancer:
None of the ingredient is listed.

Chemicals known to cause reproductive toxicity for females:
None of the ingredient is listed.

Chemicals known to cause reproductive toxicity for males:
None of the ingredient is listed.

Chemicals known to cause developmental toxicity:
None of the ingredient is listed.

Carcinogenic categories

EPA (Environmental Protection Agency):
None of the ingredient is listed.

IARC (International Agency for Research on Cancer):
None of the ingredient is listed.

TLV (Threshold Limit Value established by ACGIH):
None of the ingredient is listed.

Printing date: 03.04.2014 **Reviewed on:** 03.04.2014

Trade name: ENVIROTEMP™ FR3™ Fluid

MAK (German Maximum Workplace Concentration):
None of the ingredient is listed.

NIOSH-Ca (National Institute for Occupational Safety and Health):
None of the ingredient is listed.

OSHA-Ca (Occupational Safety & Health Administration):
None of the ingredient is listed.

State Right to Know Listings:
None of the ingredient is listed.

Canadian substance listings:

Canadian Domestic Substances List (DSL):
All ingredients are listed.

Canadian Ingredient Disclosure list (limit 0.1%):
None of the ingredient is listed.

Canadian Ingredient Disclosure list (limit 1%):
None of the ingredient is listed.

16 Other information

Date of preparation / last revision: 03/04/2014

Abbreviations and Acronyms:

ADR: Accord européen sur le transport des marchandises dangereuses par Route (European Agreement concerning the International Carriage of Dangerous Goods by Road).
IMDG: International Maritime Code for Dangerous Goods.
DOT: US Department of Transportation.
IATA: International Air Transport Association.
GHS: Globally Harmonized System of Classification and Labelling of Chemicals.
ACGIH: American Conference of Governmental Industrial Hygienists.
EINECS: European Inventory of Existing Commercial Chemical Substances.
ELINCS: European List of Notified Chemical Substances.
CAS: Chemical Abstracts Service (division of the American Chemical Society).
DNEL: Derived No-Effect Level (REACH).
PNEC: Predicted No-Effect Concentration (REACH).

This information contained in this safety data sheet is, to the best of Cargill's knowledge, correct as of the date issued. However, Cargill makes no warranties, express or implied, including any implied warranty of merchantability or any implied warranty of fitness for a particular purpose. Since the use of this product and related information is not within the control of Cargill, it is the user's obligation to determine whether the product is suitable for the user's method of use or application. Cargill disclaims all liability in connection with the use of the information contained herein or otherwise. This safety data sheet was translated from the original English version. In the event of a discrepancy between the original and translated versions, the original English will take precedence.

Dielectric Fluids

Cargill®

Electrical Apparatus

R2000

Envirotemp™ FR3™ Fluid

DESCRIPTION

Envirotemp™ FR3™ fluid is a renewable, bio-based natural ester dielectric coolant for use in distribution and power class transformers where its unique fire safety, environmental, electrical, and chemical properties are advantageous. Acceptance limits for new fluid are shown in Table 1. More than 20 years of field experience (with over one million transformers in service) confirms excellent performance.

Envirotemp FR3 fluid is formulated from seed oils and performance enhancing additives. It does **not** contain petroleum, halogens, silicones or corrosive sulfur. It quickly and thoroughly biodegrades[1] in the environment. The fluid is non-toxic in acute aquatic[2] and oral toxicity tests[3]. The Color Green tint reflects its favorable environmental profile (See Table 2) and readily distinguishes it from petroleum based oils.

Envirotemp FR3 fluid has exceptionally high flash/fire points of approximately 330/360 °C - the highest ignition resistance of any high fire point dielectric fluid currently available. It qualifies as a "high-fire-point", "less-flammable", "IEC Class K", and "non-propagating" fluid. Envirotemp FR3 fluid is Approved[4] by FM Global and Classified[5] by Underwriters Laboratories as a Less-Flammable Dielectric Liquid for use in complying with the National Electric Code[6] (NEC) and insurance listing requirements[7].

Envirotemp FR3 fluid is compatible with standard transformer construction materials and components. Envirotemp FR3 fluid should be stored, handled, and processed in a similar meticulous manner as transformer mineral oil. See Cargill's Envirotemp FR3 Fluid Storage and Handling Guide, S10, for additional information.

A transformer filled with FR3 fluid complies with the transformer temperature operating range requirements defined in IEEE C57.12.00 and IEC 60076-1.

TABLE 1

Acceptable values for receipt of shipments of new FR3 fluid

	Standard test methods		ASTM D6871	IEC 62770
PROPERTY	**ASTM**	**ISO/IEC**	**As-received new fluid property requirements**	**Unused new fluid property requirements**
Physical				
Color	D1500	ISO 2211	≤1.0	
Flash Point PMCC (°C)	D93	ISO 2719		≥250
Flash Point COC (°C)	D92	ISO 2592	≥275	
Fire Point (°C)	D92	ISO 2592	≥300	>300
Pour Point (°C)	D97	ISO 3016	<-10	≤-10
Density at 20°C (g/cm³)		ISO 3675		
Relative Density (Specific Gravity) 15°C	D1298		≤0.96	≤0.96
Viscosity (mm²/sec)	D445	ISO 3104		
100 °C			≤15	≤15
40 °C			≤50	≤50
0 °C			≤500	
Visual Examination	D1524	IEC 61099 9.2	bright and clear	clear, free from sediment and suspended matter
Biodegradation		OECD 301	readily biodegradable	readily biodegradable
Electrical				
Dielectric Breakdown (kV)	D877		≥30	
Dielectric Breakdown (kV)				
1mm gap	D1816		≥20	
2mm gap	D1816		≥35	
2.5mm gap		IEC 60156		≥35
Gassing Tendency (mm/min)	D2300		≤0	
Dissipation Factor				
25°C (%)	D924		≤0.20	
90°C (tanδ)		IEC 60247		≤0.05
100°C (%)	D924		≤4.0	
Chemical				
Corrosive Sulfur	D1275	IEC 62697	non-corrosive	non-corrosive
Water Content (mg/kg)	D1533	IEC 60814	≤200	≤200
Acid Number (mg KOH/g)	D974	IEC 62021.3	≤0.06	≤0.06
PCB Content (mg/kg)	D4059		not detectable	free from PCBs
Oxidation Stability (48 hrs, 120°C)		IEC 61125C		
Total Acidity (mg KOH/g)		IEC 62621.3		≤0.6
Viscosity at 40°C (mm²/sec)		ISO 3104		≤ 30% increase over initial
Dissipation Factor at 90°C (tan δ)		IEC 60247		≤ 0.5

NOTE: Specifications should be written referencing only the defined ASTM or IEC industry standard acceptance values and test methods. The listed 'typical' values are average values summarized from a significant number of data points over many years; they are not to be identified as acceptance values.

ASTM D6871 Standard Specification for Natural (Vegetable Oil) Ester Fluids Used in Electrical Apparatus.
IEC 62770: Fluids for electrotechnical applications – Unused natural esters liquids for transformers and similar electrical equipment.

1 Per OPPTS 835.3110
2 Per OECD 203, Method B
3 Per OECD 420
4 Less-Flammable Transformer Fluids, Approval Guide – Electrical Equipment, FM Approvals, FM Global, Norwood, MA, USA
5 EOVK.MH10678, Transformer Fluids, UL Listed and Classified Products, Underwriters Laboratories, Northbrook, IL, USA
EOUV.MH10678, Dielectric Mediums, UL Listed and Classified Products, Underwriters Laboratories, Northbrook, IL, USA;
6 National Electrical Code, NFPA 70, National Fire Protection Association, Quincy, MA, USA
7 Transformers, 5-4, Property Loss Prevention Sheets, FM Global, Norwood, MA, USA

The information presented herein is believed to be true and accurate. However, all statements, recommendations and suggestions are made without guarantee, express or implied, and are subject to change without notice. WE DISCLAIM ALL WARRANTIES, EXPRESS OR IMPLIED, INCLUDING WITHOUT LIMITATION THE IMPLIED WARRANTIES OF MERCHANTABILITY, FITNESS FOR A PARTICULAR PURPOSE and FREEDOM FROM INFRINGEMENT and disclaim all liability in connection with the use of the products or information contained herein. All such risks are assumed by the equipment manufacturer/user and the final determination of suitability of each use application is the responsibility of the equipment manufacturer/user. Products may present unknown hazards and should be used with caution. Although certain hazards are described herein, we do not guarantee that these are the only hazards that exist.

In addition to new distribution and power class transformers, a variety of other equipment, including voltage regulators, sectionalizing switches, transformer rectifiers, and electromagnets use Envirotemp FR3 fluid. The fluid is also used in retrofill applications for transformers and other fluid-filled distribution and power equipment.

ENVIRONMENTAL AND HEALTH

Envirotemp FR3 fluid is specifically formulated to help minimize health and environmental risks. The base oils come from renewable resources - commodity seeds - and are recyclable and reusable.

The US and California Environmental Protection Agencies published Envirotemp FR3 fluid's Environmental Technology Verification Report in 2003. The verification process includes biodegradation and toxicity testing. Results from the aquatic biodegradation test confirm that Envirotemp FR3 fluid's rate of biodegradation is the same as that of the standard reference material. Envirotemp FR3 fluid meets the "ultimately biodegradable" criteria (Figure 1). When tested for acute oral toxicity, Envirotemp FR3 fluid is not toxic.

The Edible Oil Regulatory Reform Act (US Public Law 104-55, 1995) makes Envirotemp FR3 fluid eligible for current and future regulatory relief. The options of alternative spill response procedures, such as bio-based remediation, are now available. The fluid's inherent viscosity and tendency of thin layers to polymerize help prevent migration along the surface and into subsurface soils.

The EPA, Occupational Safety & Health Administration (OSHA), and the Department of Transportation (DOT) do not list Envirotemp FR3 fluid as hazardous. Its Hazardous Material Information System (HMIS) rating is 1 for both health and reactivity. Envirotemp FR3 fluid is not classified as bio-accumulating or mutagenic. It is not listed as a carcinogen by National Toxicology Program (NTP), in International Agency for Research on Cancer (IARC) monographs, or by OSHA Regulation. The products of complete combustion of Envirotemp FR3 fluid are essentially carbon dioxide and water.

TABLE 2
Envirotemp™ FR3™ fluid's Environmental Attributes

Attribute	Results	Method
Aquatic Biodegradation [%]	>99	EPA OPPTS 835.3100
Ready Biodegradation [%]	>99	EPA OPPTS 835.3110
Acute Aquatic Toxicity	Non-toxic	OECD 203
Acute Oral Toxicity	Non-toxic	OECD 420
Biobased Material Content	>95%	USDA Biopreferred Program
Total Life Cycle Carbon Footprint	Carbon Neutral	Department of Commerce NIST BEES V4.0
Overall Environmental impact	1/4th impact of mineral oil	Department of Commerce NIST BEES V4.0

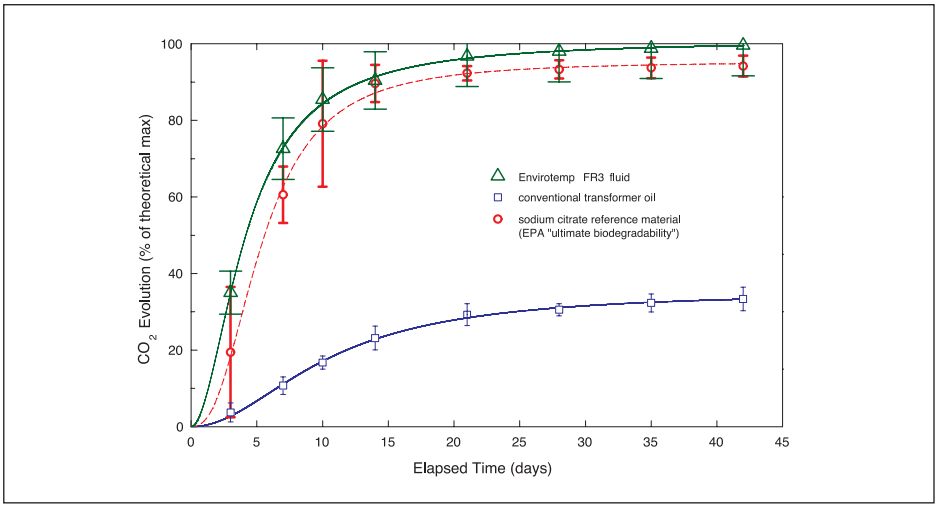

Figure 1.
Aerobic Aquatic Biodegradation Graph EPA Test OPPTS 835.3100

TABLE 3
Greenhouse gases[a] attributed to transformer fluid for its complete life cycle.

	Grams Per Unit[b]		Tons Per 1000 Gallons	
Catagory	**Mineral Oil**	**Envirotemp FR3 Fluid**	**Mineral Oil**	**Envirotemp FR3 Fluid**
Raw Materials	1,048,184	-381,590	2.306	-0.839
Manufacturing	544,363	160,212	1.198	0.352
Transportation	122,478	71,498	0.269	0.157
Use	154,124	153,450	0.339	0.338
End of Life	30,825	30,690	0.068	0.068
Total	1,899,973	34,260	4.180	0.075

a carbon dioxide equivalents
b In BEES 4.0e, one unit is a 1000 kVA transformer containing 500 gallons of fluid

SUSTAINABILITY

Building for Environmental and Economic Sustainability (BEES) software[8], available from the National Institute of Standards and Technology, uses a life-cycle assessment approach, analyzing raw material acquisition, manufacture, transportation, installation, use, and recycling and waste management, to determine a product's global warming potential.

Table 3 shows the BEES amounts of greenhouse gas generated from raw materials through end of life for mineral oil and Envirotemp FR3 fluid. The cost of mineral oil, in terms of carbon

[8] BEES, Version 4.0e, Building and Fire Research Laboratory, National Institute of Standards and Technology, August 2007, http://www.bfrl.nist.gov/oae/software/bees/

emissions, is expensive. Meanwhile, Envirotemp FR3 fluid is relatively inexpensive, about 8.2 lb/gal less green house gas emitted to produce it. Additionally, the study reports that Envirotemp FR3 fluid's overall environmental performance impact score is 1/4th that reported for mineral oil (and that's without consideration for Envirotemp FR3 fluid's transformer insulation life extending properties). This cumulative score results from adding the impacts of water intake, smog, ozone depletion, indoor air, human health, habitat alteration, global warming, fossil fuel depletion, eutrophication, ecological toxicity, critical air pollutants, and acidification.

Envirotemp FR3 fluid, and transformers filled with Envirotemp FR3 fluid are listed in the US Federal BioPreferred℠ Products Program, making them readily identifiable as BioPreferred to all applicable Federal agencies. Envirotemp FR3 fluid is an excellent option for ISO 14000, Green Build, and other similar environmental programs that promote the use of alternative, environmentally preferable and sustainable materials and procedures.

FIRE SAFETY

Envirotemp FR3 fluid has a fire point of approximately 360°C, well above the minimum of 300°C required for high fire point fluid classifications. Its flash point (approximately 330°C) is higher than the fire point of most other ignition resistant dielectric fluids in use today (Figure 2).

In laboratory and full-scale ignition tests, Envirotemp FR3 fluid has demonstrated greater fire resistance than other dielectric fluid types. Based on large-scale arc ignition testing, FM Global concluded that the probability of a pool fire evolving from Envirotemp Envirotemp FR3 fluid was so low that a heat release rate need not be determined or considered for FM Global approval.

Based on large-scale arc ignition and hot metal ignition tests, FM Global recognizes Envirotemp FR3 fluid as an equivalent safeguard to space separation, fire barriers, and fire suppression systems for most installations.

FM Global recognizes Envirotemp FR3 fluid as a component of Approved transformers per FM Global Standard 3990. When used in transformers containing 10,000 gallons of fluid or less, transformers' separation distance to buildings and other equipment may be up to 1/10th the distance required for mineral oil filled transformers, without fire walls or deluge systems.

OSHA recognizes this FM Global standard as fitting the definition of a Listed and Labeled Product per NEC Section 110-3(b). The standard permits Envirotemp FR3 fluid-filled transformers to be installed indoors, typically without sprinklers or vaults, with a minimum clearance to walls of just 3 feet (0.9M).

UL Standard 340 compares the fire hazard ratings of various fluids. Figure 3 shows the favorable rating assigned to Envirotemp FR3 fluid.

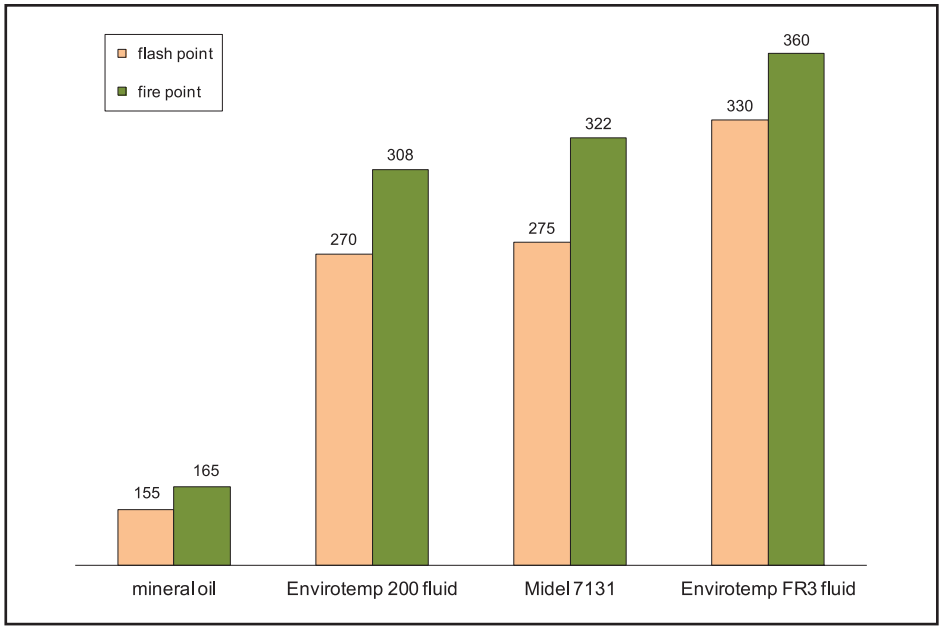

Figure 2.
Flash & Fire Point of Dielectric Fluids (°C).

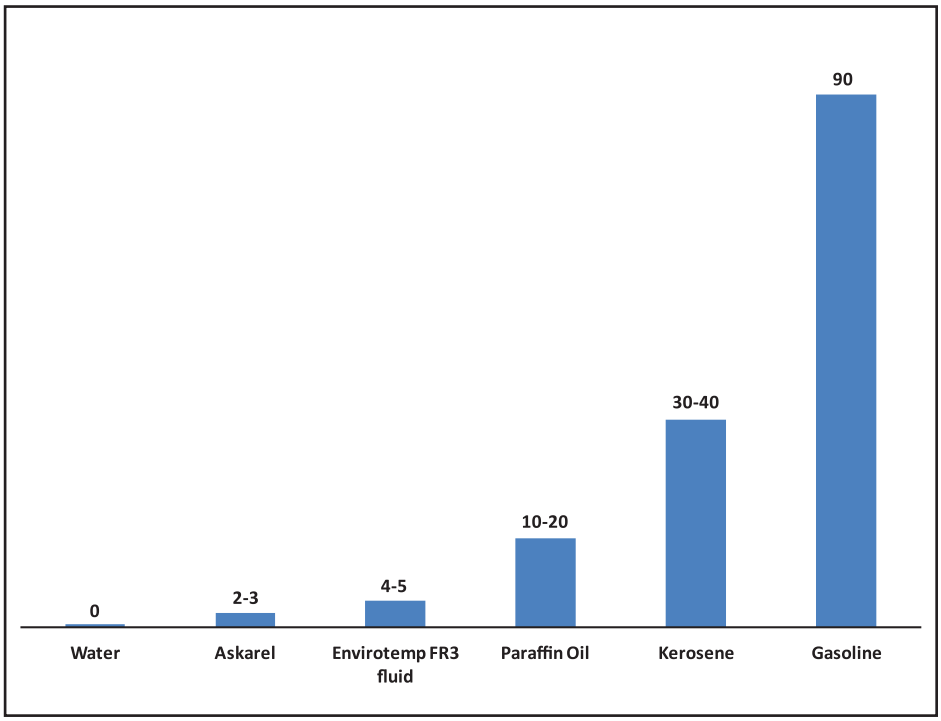

Figure 3.
Fire Hazard Rating UL Standard 340.

TABLE 4
Transformer Insulating Paper End-of-Life (Hours)

End-of-Life Basis	150°C Mineral Oil	150°C Envirotemp FR3 Fluid	150°C IEEE Basis	170°C Mineral Oil	170°C Envirotemp FR3 Fluid	170°C IEEE Basis
Retained Tensile Strength						
50%	3100	>4000*	1602	240	1300	323
25%	4000	>4000*	3327	490	4000	671
Degree of Polymerization						
200	3200	>4000*	3697	480	3400	746

* Paper did not reach end-of-life over the duration of the test. To be conservative, extrapolation was not employed.

There are no known reports of dielectric pool fires involving Envirotemp FR3 fluid filled transformers.

MEETING THE CODES

Less-Flammable fluids are recognized as a fire safeguard in Section 15 of the National Electrical Safety Code (Accredited Standards Committee C2) for generation and distribution substations. Envirotemp FR3 fluid meets the National Electrical Code Section 450-23 requirements as a listed less-flammable liquid. It is covered by OSHA Article §1910.305, Section 5(v).

Envirotemp FR3 fluid is FM Global Approved and Underwriters Laboratories Classified "Less-Flammable" per NEC Article 450-23, fitting the definition of a Listed Product per NEC. For additional information, request Cargill's NEC Requirement Guidelines 2008 Code Options for the Installation of Listed Less-Flammable Liquid Filled Transformers.

FLUID/PAPER INSULATION SYSTEM

The unique chemical structure of Envirotemp FR3 fluid provides superior insulation system performance compared to other types of dielectric fluids. The thermal properties of Envirotemp FR3 fluid make it a more efficient coolant than higher molecular weight silicone and hydrocarbon dielectric coolants.

Envirotemp FR3 fluid has an exceptional ability to remove water generated by aging paper. This enables the fluid to significantly reduce the aging rate of transformer insulating paper. Per IEEE C57.100, accelerated aging tests show that Thermally Upgraded Paper (TUK) paper insulation aged in Envirotemp FR3 fluid takes 5-8 times longer to reach the same end-of-life points as TUK paper insulation aged in conventional mineral oil.

Table 4 compares the time to reach insulation end-of-life for TUK paper aged in Envirotemp FR3 fluid and conventional transformer oil. The time to insulation end-of-life calculated using the IEEE C57.91 loading guide is included for comparison. Accelerated aging tests show similar thermal aging improvement for non-thermally upgraded Kraft paper.

APPLICATIONS

NOTE: The suitability of each application of Envirotemp FR3 fluid is the responsibility of the user. Contact Cargill Envirotemp FR3 Fluids group for application guidelines.

New Transformers

Distribution and Power class transformers filled with Envirotemp FR3 fluid for indoor, submersible and outdoor applications are available from manufacturers worldwide.

For indoor applications, Envirotemp FR3 fluid-filled transformers provide the proven technical and performance advantages of liquid-filled designs over dry types as well as a lower total life cycle cost when compared to all other transformer types.

Many types of Envirotemp FR3 fluid-filled transformers are in service: pole-mounted, pad-mounted, networks, reactors, small, medium and large substations, transmission substations, and generator step-ups. Envirotemp FR3 fluid-filled transformers are accepted in both industry and government. Contact Cargill Envirotemp FR3 Fluids group for a copy of the Envirotemp FR3 Fluid User's List, Bulletin B110.

Retrofilling Transformers

Envirotemp FR3 fluid is especially suited for upgrading the environmental and fire safety of mineral oil-filled transformers. It is miscible with mineral oil, high molecular weight hydrocarbons and other ester fluids. FR3 fluid is not miscible with silicone and should not be applied in transformers previously containing silicone. FR3 fluid can also be used in PCB (Askarel) replacement initiatives.

Unlike most other fluid types, the residual transformer oil in a properly retrofilled transformer should not reduce the fire point of Envirotemp FR3 fluid below the NEC minimum of 300°C (Figure 4). This is true even after full equilibrium has been achieved between the replacement fluid and the residual mineral oil in the paper.

Additional advantages of retrofilling with Envirotemp FR3 fluid include high dielectric strength, better match of dielectric constant to Kraft paper insulation, excellent lubricity, material compatibility, and a coefficient of expansion similar to conventional transformer oil. Envirotemp FR3 fluid has superior resistance to coking and sludge formation when compared to conventional transformer oil. In addition to passing the Power Factor Valued Oxidation (PFVO) test, Doble Laboratories' Sludge-Free Life tests resulted in no measurable sludge. The fluid also acts as a drying agent for transformer insulation that has become wet from aging, extending the useful life of the transformer insulation system.

Switching Devices

With excellent dielectric strength retention (Figure 5), lubricity, and gassing tendencies, Envirotemp FR3 fluid is an excellent switching medium at normal operating temperatures. Proven applications include new and retrofilled sectionalizing switches and transformers with load break accessories such as Bay-O-Net and current-limiting fusing, on-off and four position switches, and Vacuum Fault Interruption protection devices.

[9] P.J. Hopkinson, L. Dix, "Tapchangers for De-energized Operation in Natural Ester Fluid, Mineral Oil, and Silicone" IEEE/PES Transmission & Distribution Conference & Exposition, July 26-30, 2009, Calgary Canada

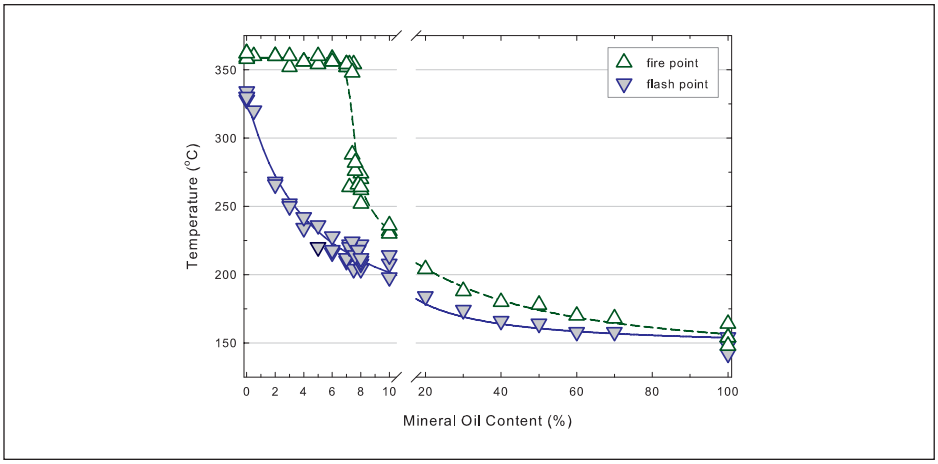

Figure 4.
Envirotemp™ FR3™ fluid Flash & Fire Point Variation with Conventional Transformer Oil Content.

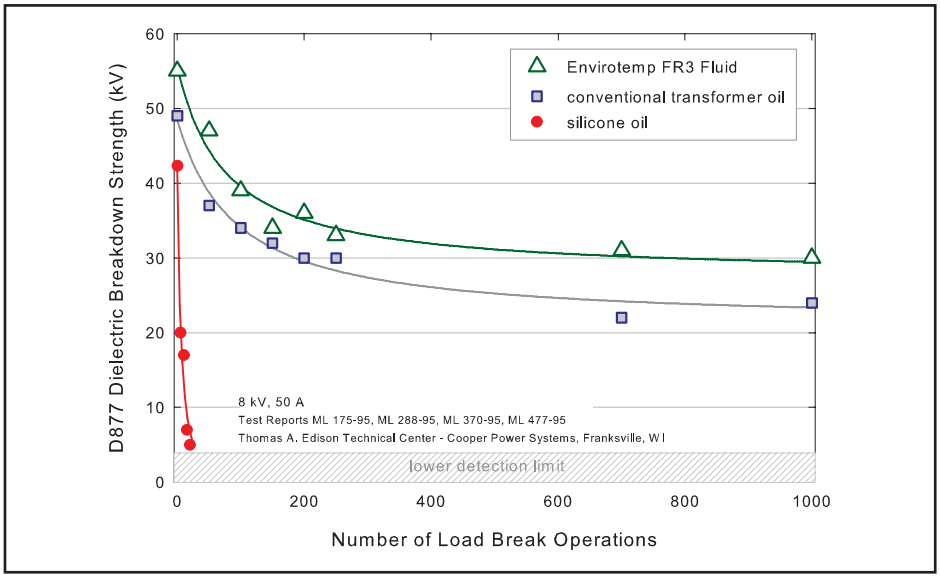

Figure 5.
Fluid loadbreak dielectric strength retention comparison.

Accelerated life tests confirm stationary contacts are most stable in Envirotemp FR3 fluid[9]. In coking tests, Envirotemp FR3 fluid produced less than 1/20th of the deposits that were produced in conventional mineral oil.

Due to the low temperature viscosity difference of Envirotemp FR3 fluid compared to conventional transformer oil, the equipment manufacturer should verify applications at low ambient temperatures.

Other Applications

The inherent safety and performance properties of Envirotemp FR3 fluid have led to its application in electrical equipment other than transformers, including industrial electromagnets, superconducting motors, klystron modulators, transformer/rectifier sets, and heat transfer applications. Envirotemp FR3 fluid has excellent lubricity, an important characteristic for application in equipment with moving parts. High voltage bushing applications also appear promising due to the fluid's excellent ability to minimize insulating paper degradation and its low gassing tendency value of approximately -79 µl/min.

STORAGE AND HANDLING

Similar meticulous procedures for storing and handling conventional transformer mineral oil should be followed with Envirotemp FR3 fluid. To help maintain the extremely low percent moisture saturation at time of fluid manufacture, exposure time to air should be minimized. Drum and tote storage should be indoors or outdoors protected from the elements, including sunlight. Refer to the Cargill Envirotemp FR3 Fluid Storage and Handling Guide S10.

Note: To maintain the optimal fluid properties for its intended use as an electrical insulating fluid, exposure to oxygen, moisture, and other contaminants must be minimized. Except for short storage periods, material that has been immersed in Envirotemp FR3 fluid should not be exposed to air. Thin films of natural esters tend to polymerize much faster than conventional transformer oil. For equipment drained of Envirotemp FR3 fluid, it is recommended that the equipment be placed in an inert gas environment, be re-immersed in fluid, or rinsed with mineral oil. Where the transformer power factor is a concern, hot air drying is an unacceptable process for assemblies already impregnated with a natural ester fluid. For impregnated assemblies that require additional drying, a method of drying that does not expose the impregnated insulation to air is required to avoid excessive oxidation of the dielectric fluid.

FLUID MAINTENANCE

Periodic preventive maintenance tests for Envirotemp FR3 fluid-filled equipment should follow the same schedule used for transformers filled with conventional transformer oil. Key tests on fluid samples include:

1. Dielectric Strength: The IEEE C57.147 minimum acceptable ASTM D1816, 2mm gap limits for continued use of service-aged Envirotemp FR3 fluid are 40 kV (≤ 69 kV), 47 kV (69 ≤ kV < 230), and 50 kV (≥ 230 kV).
2. Flash Point and Fire Point. Small amounts of mineral oil will not significantly reduce the fire point of Envirotemp FR3 fluid. Contamination above 7% may lower the fire point below 300°C. If contamination is suspected, the flash and fire points should be measured.

Figure 6.
Prior to shipment, Envirotemp™ FR3™ fluid undergoes extensive quality assurance testing. The facility where Envirotemp FR3 fluid is produced is ISO 9001 Certified.

3. Dissolved gas analysis of Envirotemp FR3 fluid is particularly useful for high value equipment or equipment servicing critical loads.
4. Color and appearance, dissipation factor, acid number, resistivity, viscosity, and interfacial tension are indicators of possible fluid contamination or unusual degradation.

For fluid that cannot be reconditioned, disposal options include selling to lube oil recyclers, rendering companies, or providers of fuel for industrial boilers and furnaces. Used fluid uncontaminated by controlled hazardous materials does not fall under the jurisdiction of the Federal Used Oil Regulation (CFR Title 40 Part 279).

FUNCTIONAL SPECIFICATION FOR NEW ENVIROTEMP FR3 NATURAL ESTER LESS-FLAMMABLE TRANSFORMER DIELECTRIC COOLANT

1.0 Scope

1.1. This specification describes a non-toxic (in acute aquatic[10], and oral toxicity[11] tests), biodegradable[12], fire resistant, bio-based[13] natural ester dielectric fluid. It is intended for use in electrical equipment as an environmentally preferred, less-flammable insulating and cooling medium.

2.0 Requirements

2.1 Fluid Manufacturer

Fluid manufacturer shall have a minimum of ten (10) years experience producing and testing dielectric coolants. Manufacturer upon request shall provide AC withstand and impulse withstand for both gap and creep from 3mm to 150mm.

2.2 Dielectric Coolant

The dielectric coolant shall be a biobased biodegradable, be FM Global Approved, UL® Classified as a less-flammable fluid. It shall meet the property limits listed below. The base fluid shall be 100% derived from seed oils.

2.3 Acceptable values for receipt of shipments of new Enviotemp FR3 fluid are shown in Table 1

2.4 Environmental and Health Third Party Validations

The fluid shall have a US EPA Environmental Technology Verification (ETV) Statement published. The fluid shall meet the test limits shown in Table 2

2.5 Packaging

The electrical insulating fluid shall be furnished in sealed vessels suitable for the purpose, including 5-gallon containers, 55-gallon drums, 330-gallon totes, or in bulk. Each vessel shall have tampering indicating devices.

3.0 Recommended Customer Receiving Quality Control

3.1 Inspection

Each lot received shall be visibly inspected for container integrity. Verify that tamper proof seals are intact and no leaks are visible.

3.2 Receiving Tests

Samples shall be taken from containers per ASTM D 923 Section 2.2, as follows:

Lot Size (gallons)	Number of Containers Sampled
600 or less	1
601 - 3000	2-6
3001 or more	6 minimum (10% of quantity of containers recommended)

When material will be combined for production, samples may be mixed together in equal proportions to create a composite sample for testing. Minimum tests required are dielectric strength and visual inspection. Dissipation factor test is highly recommended, although not essential.

4.0 Important information

4.1 Storage

Avoid storing drums and totes outdoors. Extreme temperature variations can stress the integrity of container protective seals. Exposure of totes to sunlight can cause fluid discoloration

4.2 Intended Use

The use of electrical insulating and cooling fluid is generally dictated by the engineering design of the electrical apparatus. The electrical insulating fluid covered by this specification is intended for use as an insulating and cooling medium in electrical equipment.

[10] Per OECD 203, Method B
[11] Per OECD 420
[12] Per US EPA OPPTS 835.3100 and US EPA OPPTS 835.8110 (ii)
[13] Per USDA Biopreferred minimum biobased content for Fluid-Filled Transformers - Vegetable Oil-Based

2017

Technical Specifications of Fire Suppression System

TEL：0755-28184905 TAX：0755-86596706

Shen Zhen NHFIRE Technology Co., Ltd

2017-1-1

I. Equipment List

No.	Item	Spec.	Unit	Qty.
	Control part			
1	Agent Release Panel UL/FM	R2002	Pcs	1
2	Power 12V7A	NH-01	Pcs	2
3	Smoke Detector UL/FM	2W-B	Pcs	1
4	Heat Detector UL/FM	5151	Pcs	1
5	Dual-Action Agent Release Stations UL/FM	NBG-12LRA	Pcs	1
6	Alarm Bell UL/FM	SSM-24-6	Pcs	1
8	Horn Strobes UL/FM	P2R	Pcs	1
9	Manual Switch UL/FM	K1832-10	Pcs	1
	Gas part			
10	FM-200 Agent FC227 药剂，UL/FM 公斤	700001	Kg	7.5
11	CylinderAssembly,15L 升钢瓶带瓶头阀 UL/FM	FTF000035	Pcs	1
12	Front Clamp,125/200/225 包箍	FTF 400035	Pcs	2
13	Master Cylinder Adapter Kit 钢瓶接头组件	FTF 800011	Pcs	1
14	Actuation Hose,30"气动启动软管 762mm	FTF 701004	Pcs	1
15	Male Connector,5/16"Flare×1/8"NPT 启动管路接头	FTF 800023	Pcs	1
16	Electric Control Head,Stackable,24VDC 防爆型电磁阀 UL/FM	FTF 500023	Pcs	1
17	Lever Operated Control Head 手动启动器 UL	FTF 201027	Pcs	1
18	Discharge Nozzies, Brass 喷嘴	FTF620000	Pcs	1
19	Pressure Switch,3 Pole Double Throw 压力开关 UL/FM	FTF 503007	Pcs	1
20	消防管道、阻燃电线和其它附件		PCS	1

II. Project Overview

This project is an energy storage fire system for containers of Sungrow, and its technical scheme is gas fire extinguishing system with PV storage for containers. One protected area: containers, with independent and relatively confined space. In control panel, fire hazards refer to each electrical component and cable, whereas in containers, a battery unit is the fire hazard. According to the layout in the container and the characteristics of the equipment, meanwhile, to meet the fire safety requirements, considering the advantages of our gas fire extinguishing products, this gas fire extinguishing system in the protected area is planned as follows:

1、**Containers: Install FM-200 Gas Fire Extinguishing System.**

2、**Control system, detection system and alarm system are installed accordingly.**

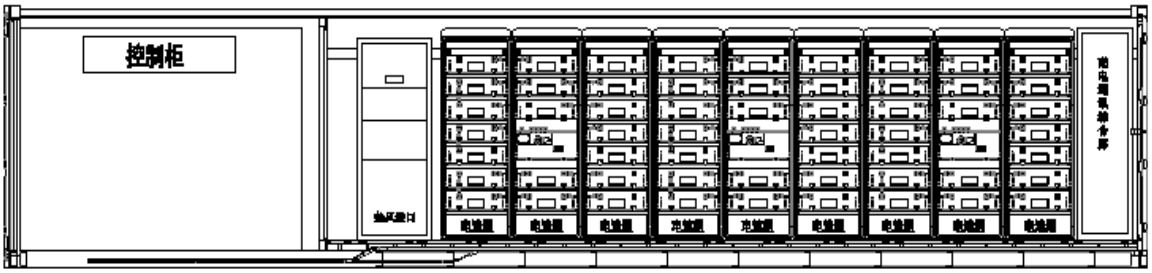

III. FM-200 Gas Fire Extinguishing System (Brand: KIDDE or Firetrace, products are all UL/ FM certified)

1. System Profile

As a clean and safe extinguishing agent, FM-200 is applied in total flooding fire extinguishing system. It is certain that it has long been the replacement of Halon 1301, and at the same time, retains the excellent fire extinguishing characteristics of Halon, but does no harm to the environment. Its storage and release conditions are similar to Halon 1301, and with almost the same system composition. However, FM-200 is not the direct replacement of Halon 1301, for they are different in both extinguishing agent

quantity and release characteristics. As to Type A fire, the design flame extinguishing concentration of FM-200 is 7.17%, so, in the same protected space, 45% more extinguishing agent is used than in Halon system.

In total flooding extinguishing system, FM-200 is safer than Halon, reaching 9% of concentration approved by U.S. Environmental Protection Agency (EPA), as verified in lately published HAG report. Concerning new type of extinguishing agent, FM-200 is the first tested and approved by Underwriter Laboratories Inc.(UL), tested by Factory Mutual Research Corporation (FMRC); in accordance with NFPA2001; approved to be used in the people attended area by policy committee of Important new substitutes of(SNAP), and being product with no restrictions.

FM-200 is not destructive to the ozone layer in atmosphere (i.e. ODP=0), and it features non-conductivity, cleanliness. It leaves no residues after extinguishing, causes no damage to electrical equipment, magnetic belt or documents, but offers effective protections. With no solid dust or oil stain, FM-200 is stored at liquid phase and released at gas phase. After spraying, it is discharged naturally or quickly through ventilation system. It neither leaves residues nor pollution at site, so it is easy to dispose of.

The fire extinguishing system in this manual is referred to as “engineering system”, which, for instance, consists of many a storage cylinder of FM-200, collecting pipes and multiple gas release nozzles linked through piping net, being started either mechanically or electrically. Manual actuation is accomplished by manual discharge controller which is installed on the top of a valve unit of storage cylinder head, or through a remote pneumatic pipeline. As to electric actuation, it is accomplished by a solenoid valve which is installed on the top or the side of a valve of storage cylinder head, with signals sending from detector and control panel for automatic start-up.

This manual provides effective information in terms of design, purchase, installation, operation and maintenance of fire suppression system. Should some expressions in the manual be hard to understand, or some queries on how to correctly design the suppression system, please contact our professional engineers for timely solutions.

2. Work Principle

When a fire occurs in the protected area, the detector which first detects the fire signal will send a signal to fire extinguishing control panel. After the panel receives a signal from another type of

detector, it will activate the selector valve corresponding to the fire area. After 0-30 seconds' delay, the panel opens the corresponding active extinguishing agent cylinder unit and releases the agent in the cylinder unit. Thereof, part of extinguishing agent released opens the gas starter on passive extinguishing agent cylinder unit to start subsequent passive extinguishing agent cylinder unit and releases extinguishing agent to the collecting pipe, through which it is discharged at end of a nozzle of piping net.

3. System Composition

This gas fire extinguishing system is composed of the fire controller, detector, alarm, electromagnetic starting device, extinguishing agent cylinder unit, extinguishing agent, starting hose, discharge hose, check valve for agent flow, pressure reduction device, collecting pipe, safe discharge device, selector valve, pressure signal feedback device, piping net and nozzle etc.

4. Technical Requirements

The fire extinguishing mode adopts total flooding extinguishing system, that is, within the prescribed time, spraying a certain concentration of fire extinguishing agent and evenly filling the entire protected area can extinguish the fire in any part of the protected area.

There are three control methods of fire extinguisher system and they are automatic, electric manual and mechanical manual modes. When someone is working or on duty, the electric manual control mode should be used. The automatic control mode should be used in the absence of someone. The conversion of automatic and manual control modes is possible with the fire extinguishing control panel (manual control box is set outside the door of the protected area, and emergency stop button and emergency start button are set inside the manual control box).

Requirements for the protected areas

➢The fire resistance limit of the protected area is > 0.5h; the compression resistance strength is >1200Pa.

➢To ensure the safe evacuation of personnel, fire alarm should be issued before the release of fire extinguishing agent. The delay time between fire alarm and releasing fire extinguishing agent is 30 seconds.

4) When a fire occurs in the protected area and the system is under the "automatic" mode, the

temperature /smoke detector detects the fire and sends out a fire signal. After receiving the signal, the fire alarm controller sends out an acousto-optic alarm signal while it instructs the fire extinguishing controller to work and sends out linkage instructions to shut down the linked equipment. After 30 seconds' delay, the fire extinguishing controller issues firefighting instruction, then the starter generates high-pressure gas to open the corresponding selector valve and cylinder valve to extinguish the fire.

5) Set up emergency fire extinguishing device to ensure that the fire can be put out in the exceptional conditions.

6) The following must be achieved: when the temperature / smoke detector detects the fire signal, but when there is no need to start the fire extinguishing device, the start-up of the fire extinguishing device can be under control.

5. Start Mode

1）Automatic Start

➢ When smoke or temperature detector alarms, the alarm bell in the protected area rings as an early warning.

➢ When both smoke and temperature detectors alarm at the same time, the acousto-optic alarm starts. Activate the corresponding selector valve in the protected area, switch off the air conditioning, fire valve and fan and cut off the non-fire power supply like lighting. After the delay of 30 seconds, the corresponding extinguishing agent cylinder unit starts.

2）Button Start

For the gas fire extinguishing control system, either in the "automatic" or "manual" start mode, as the emergency start button is pressed, it activates the acousto-optic alarm in the protected area, releases the door guard, switches off the air conditioning, fire valve and fan, cuts off the non-fire power supply such as lumination, starts the corresponding selector valve in the fire protected area, and starts the corresponding extinguishing agent cylinder unit after 30 seconds' delay. After the fire extinguishing system puts out the fire by spraying extinguishing agent, the acousto-optic alarm is activated.

3）Mechanical Emergency Start-up

First, manually open the corresponding selector valve in the fire protected area, then manually open the corresponding extinguishing agent cylinder unit.

Emergency Stop Of Spraying Operation In Gas Fire Extinguishing System

Within 30 seconds after gas fire extinguishing system starts the delay, press the emergency stop button to stop the operation.

6. References

Factory Manual（Approved）

Underwriter's Laboratory Inc.（UL）Recognized Component

NFPA 2001 Clean Agent Fire Extinguishing Systems（Listed Alternative）

China National Fixed Fire Fighting System Testing Center

Code for design of gas fire extinguishing systems (GB50370-2005)

Gas Fire Extinguishing Systems and Components GB25972-2010）

Gas Fire Fighting System Selection, installation and Extinguisher Distribution in Buildings （07S207）

Code for Design of Automatic Fire Alarm System (GB50116-2013)

7. Product advantages

FM-200 (HFC-227ea) is a clean, gaseous agent that contains no particulates or oil residues and is manufactured in strict accordance with ISO9002 standards to ensure the product purity. FM-200 leaves no residue and grease on precision electronic instruments. The residues and greasy matter can be completely discharged from the protected area by ventilation.

Being thermally and chemically stable, FM 200 has no potential damage in the atmosphere, with lifetime of 31-42 years in the atmosphere. The US Environmental Protection Agency (USEPA) considers that FM-200 is not a substance of long-term retention after release, so it can be used without restriction.

FM-200 can effectively extinguish type A, B and C fires. Typical protected areas include the followings, but far from being limited to:

●Banks and Vaults

●Electronic data center

●Communication room and telephone exchange room

●Library and Archives

●Communication Center

● IDC

●Variable-frequency Drive And Switch Room

●Control Center

●Labs

●Clean Room

●Flammable Liquid Warehouse